Fundamentals of Fixed Bed Adsorption Processes: Analysis of Adsorption Breakthrough and Desorption Elution Curves.

James M. Becnel, Charles E. Holland, James McIntyre, Michael A. Matthews, and James A. Ritter

Department of Chemical Engineering
University of South Carolina, Columbia, SC, 29205

Introduction

Fixed bed adsorption processes are ubiquitous throughout the chemical process and other industries. This laboratory is an extension of a lab proposed by Cruz et. al. (2000), which is designed to allow students to explore essential operating features of a fixed bed adsorber through hands-on, data-gathering experiments. Students expand knowledge from the Unit Operations classroom, as well as develop their experimental, analytical, and communication skills. From the students' perspective, the laboratory will integrate experimental procedures and data with fundamental modeling, while providing insight into adsorption processes. An open-ended design challenge is also incorporated. Topics for student assessment are also presented.

Learning Objectives

This laboratory is designed to integrate analysis, evaluation, design, and communication skills. It is an extension of the adsorption/desorption experiment presented by Cruz, et. al. (2001). In their laboratory students:

- Gather data in a hands-on experiment.
  - Experimental design.
  - Manual and automated controls.
  - Automated data acquisition.
- Observe and model dynamic adsorption behavior:
  - Non-linear data fitting.
  - Solute Movement Theory / the Method of Characteristics.
  - Concentration shock waves.
- Graphing data for clarity and to support explanations.

Using a mostly identical apparatus, we have modified the lab to include:

- Dynamic mass balances.
- Numerical integration of data.
- Numerical differentiation of data.
- Equilibrium adsorption isotherms based on dynamic mass balances.
- Equilibrium adsorption isotherms based on the Method of Characteristics.
- An open-ended design challenge based directly from the student's data.

Copyright © 2002, American Society for Engineering Education."

The assignments, group structure, and setting of this laboratory are designed to develop students' modeling and data analysis skills while gaining a more complete understanding of adsorption processes.

Group Structure and Responsibilities

An experimental group is composed of three students, each with well-defined responsibilities. The group leader, E1, directs and coordinates the activities of the group. E1 is also responsible for presenting the technical oral report, although all group members will attend the oral presentation. The oral presentations are given to the instructor and the entire laboratory class. E2 is responsible for the written technical report which is submitted at the time of the oral presentation. The written report contains detailed descriptions of their experimental design, data recorded, data analysis, dynamic modeling, design problem, and conclusions / recommendations. The third group member, E3, is responsible for authoring and submitting the experimental plan, which details proposed experimental conditions prior to operating the apparatus. The experimental plan is approved by the TA, who may provide direct guidance if needed. The experimental plan also contains a detailed operational procedure to ensure the students understand the safety concerns and the proper operation of the apparatus before collecting data.

Apparatus

Refer to figure 1 for a schematic of the apparatus. The adsorber bed is a stainless steel column is two inches (2") in internal diameter by eleven inches (11") high. The column is vertically oriented to distribute the packing evenly across the column's diameter. Nine (9) thermocouples are mounted at regular intervals down the column's length, about one inch (1") apart, and measure the temperature profile of the adsorbent. Feed to the column is supplied by two high-pressure storage tanks, one of pure helium (He), and the other of pure carbon dioxide (CO_2). The flow of each gas is regulated by a mass flow controller, which is the only significant change to the design of Cruz et. al.(2001). The two gas streams mix at a tubing cross, where the pressure transducer is also attached. The mixed gas stream is fed into the column. At the column exit, there is a manual needle valve, which is used to control system pressure during experiments. The effluent from the bed passes through a detector flow meter to the CO_2 detector, after which the gas is vented.

A PC is used as both a controller and a data acquisition system. The students can set the feed composition directly. The compositions are maintained by controlling two mass flow controllers that supply gas to the column. The PC also records the thermocouple data and the effluent CO_2 concentration during experiments.

Experimental Procedure

Students can design experiments over a wide range of experimental conditions. The apparatus can operate at pressures from 5 to 100 psig, a flow rate from 2 to 5 SLPM, and a CO_2 concentration range from 0 to 5 percent by volume. The particular conditions for experimental runs will be chosen by the students and cleared with the TA prior to operating the equipment. The column feed composition is set at runtime and is controlled by LabVIEW® software. However, the system pressure is controlled manually. Students must manually adjust the needle valve at the column exit to maintain the desired system pressure. LabVIEW® also records the temperatures and effluent composition continuously.

Copyright © 2002, American Society for Engineering Education."

Initially, pure helium is fed to the column to equilibrate the system. The column is taken to be at equilibrium when 1) the effluent concentration levels off at or near the feed concentration, and 2) when all the thermocouple readings are within five degrees Celsius (5º C) of each other. After the initial condition has been established, an experiment is begun by creating a step change in the CO_2 feed concentration. The step change is from zero to the level indicated in the experimental design. This adsorption breakthrough experiment is continued until the column has reached equilibrium conditions, as described above. Once the breakthrough experiment is complete, a step change in the feed composition back to pure helium begins the complementary desorption elution experiment, which continues until the column has reached equilibrium conditions. Once the elution experiment is completed, the apparatus is ready for another cycle of experiments.

Data Analysis

The data gathered in the experiments is used to determine the carbon dioxide loading of the bed, the equilibrium adsorption isotherm, and the adsorption and desorption profiles.

Carbon Dioxide Loading

The carbon dioxide loading in the bed can be determined by a dynamic mass balance, which requires numerical integration of the data. Using the breakthrough cure data from an adsorption breakthrough run, the time equivalent to the total or stoichiometric capacity of the column for CO_2 is calculated by numerically integrating the following equation:

$$t_t = \int_0^\infty \left(1 - \frac{c}{c_0}\right) dt \qquad \textbf{Equation 1}$$

where t_t is the time equivalent to the total or stoichiometric capacity, t is time, c is the concentration of CO_2 at time t, and c_0 is the feed concentration of CO_2. With t_t determined, the amount of CO_2 adsorbed by the activated carbon (the loading) is calculated from the following equation:

$$q = \frac{\dfrac{y_f Q_f t_t P_s}{RT_s} - \dfrac{y_f \varepsilon_T V_b P_b}{RT_b}}{m_c} \qquad \textbf{Equation 2}$$

where q is the CO_2 loading, y_f is the mole fraction of CO_2 in the feed, Q_f is the volumetric feed flow rate at standard conditions, P_s is the standard pressure, R is the universal gas constant, T_s is the standard temperature, e_T is the total porosity, V_b is the volume of the bed, P_b is the pressure inside the bed, T_b is the final average temperature inside the bed, and m_c is the mass of activated carbon inside the bed. The total porosity of the bed is determined from

$$\varepsilon_T = \varepsilon_b + (1 - \varepsilon_b)\varepsilon_p \qquad \textbf{Equation 3}$$

where e_b is the packed bed porosity and e_p is the particle porosity. The first term in the numerator on the RHS of Equation 2 is the total number of moles of CO_2 retained by the column over the breakthrough time; when divided by m_c, this quantity is sometimes referred to as the column isotherm for obvious reasons. The second term in the numerator on the RHS of Equation 2 is the number of moles of CO_2 retained by the column but only in the gas phase. Clearly, the

Copyright © 2002, American Society for Engineering Education."

difference in these two quantities gives the number of moles of CO_2 adsorbed by the activated carbon at the final equilibrium temperature and partial pressure of the CO_2; hence, repeating this analysis for each adsorption breakthrough run, provides a total of four points on the equilibrium adsorption isotherm at the final bed temperature, i.e., $q = f(P_{CO2})$ at T_b.

Equilibrium Adsorption Isotherm

The four data points obtained from the adsorption breakthrough experiments should be an accurate representation of the actual equilibrium adsorption isotherm, as long as the four temperatures are within about 0.5 ^oC of each other. This is because the analysis is based simply on a mass balance; it involves no assumptions. The four data points can be used to fit the Langmuir adsorption isotherm, which is expressed as

$$q = \frac{q_s bc}{1 + bc} \qquad \textbf{Equation 4}$$

where q_s is the maximum saturation loading and b is a constant; note that the product $q_s b$ is the Henry's law constant. The two constants, q_s and b can be determined by non-linear regression.

The Method of Characteristics / Solute Movement Theory

Additionally, from each desorption elution run, the entire equilibrium adsorption isotherm up to P_{CO2} in the feed can be determined from an isothermal local equilibrium theory analysis. However, the accuracy of this approach depends on how well the experimental conditions adhere to the strict assumptions associated with the development of the isothermal equilibrium theory model.

According to equilibrium theory, each concentration moves at a certain characteristic velocity throughout the fixed bed. This characteristic velocity is defined as

$$v_c = \left(\frac{x}{t}\right)_c = \frac{v_i}{1 + \left(\frac{\rho_b}{\varepsilon_b}\right)\frac{dq}{dc}} \qquad \textbf{Equation 5}$$

where v_c is the characteristic velocity of concentration c, x is the position in the bed, t is time, v_i is the interstitial velocity at the bed conditions, $?_b$ is the packing density of the adsorbent in the bed, and dq/dc is the derivative of the equilibrium adsorption isotherm. This derivative is, in general, a function of concentration, which in turn makes the characteristic velocity a function of concentration. At a given concentration, the characteristic velocity is constant, and Equation 5 can be rearranged as

$$\frac{dq}{dc} = \frac{\varepsilon_b}{\rho_b}\left(\frac{v_i t}{L_b} - 1\right) \qquad \textbf{Equation 6}$$

Here, the bed length L_b replaces x. Given a desorption elution profile, dq/dc is calculated for each chosen (recorded) time t; and for each time t, a unique concentration of CO_2 exists. This

Copyright © 2002, American Society for Engineering Education."

gives *dq/dc = f(c)*, which can be integrated numerically to obtain *q = f(c)*, i.e., an approximation of the equilibrium adsorption isotherm up to the feed concentration of CO_2.

Adsorption / Desorption Profiles

Once the equilibrium adsorption isotherm is known, it can be used in conjunction with local equilibrium theory to compute characteristic velocities. The derivative of the Langmuir adsorption isotherm is given by

$$\frac{dq}{dc} = \frac{q_s b}{(1+bc)^2}$$ **Equation 7**

Once the constants in Equation 7 are known (by a non-linear fit of the Langmuir isotherm to the adsorption data), the derivative of Equation 6 can be computed and used to obtain *dq/dc = f(c)*.

Substitution of Equation 7 into Equation 5 gives a relationship to compute the characteristic velocity of each concentration. Since for each v_c, c is constant, Equation 5 can be integrated to give the following relationships:

$$x = v_c t$$ **Equation 8**

$$t = x / v_c$$ **Equation 9**

With these relations, the desorption elution curves can be predicted using Equation 9 with L_b replacing *x*:

$$t = L_b / v_c$$ **Equation 10**

Process Evaluation and Design

From a process point of view, the students must determine the feasibility of purifying He by removing CO_2 with this kind of cyclic adsorption / desorption process. This can be easily accomplished with the dynamic mass balances of their experiments, based on 5% breakthrough. With a single column, it takes more He to purge the adsorbent than is produced as a clean product, making the recovery of He negative. The students are asked to propose a preliminary process design using multiple beds that can be a feasible process. Such a problem is designed to test the student's ability to use the trends present in the complex models to create a shortcut to roughly sketch out a design and get ball-park figures.

Outcomes

Students provide the following results from their experimental work and data analysis:

1. Four (4) adsorption breakthrough curves at temperatures, pressures, and feed compositions specified by the experimental plan.
2. The four (4) corresponding desorption curves.
3. An analysis of the breakthrough curves:

Copyright © 2002, American Society for Engineering Education."

   a. Determine the equilibrium adsorption isotherm.
   b. Calculate specific temperature and concentration velocities for each experiment.
   c. Create a dynamic adsorption/desorption model based on isothermal, local equilibrium theory.
4. Concise graphs, generated from the experimental data, to illustrate the experimental results:
   a. Adsorption breakthrough and desorption elution curves [$c/c_0 = f(t)$].
   b. In-bed temperature traces for one adsorption/desorption experimental set for three (3) different thermocouple positions [$T = f(t)$].
   c. In-bed temperature profiles for one adsorption/desorption experimental set for several times [$T=f(z)$].
5. A determination of how well the observed data and trends are predicted by the isothermal, local-equilibrium model, with adequate supporting data and illustrations.
6. Present a basic PSA design for the purification of He from a He/CO_2 mixture based on their experimental data and analysis.

Assessment

Students are assessed in four areas: laboratory performance, experimental design, technical report and presentation, and a design problem. The topics below focus on the analysis and learning directly related to this laboratory (the "hard skills"). Presentation and writing (the "soft skills") are not covered here, although they are included in the overall assessment.

Laboratory Performance

Laboratory performance is assessed by the assigned TA who interacts only with one particular experimental group per lab session. Here, the students are assessed on their safety practices, equipment operation, and data collection procedures.

Experimental Design

The experimental plan proposed by the students provides an indication of the students' prior knowledge. Their choice of experimental conditions shows not only their ability to identify important parameter spaces for model fitting, but an understanding of adsorption processes. It is important that the students provide reasons for particular design to provide adequate feedback.

Variation in feed concentration can provide information of the mass transfer and heat effects of the column. Smaller feed concentrations imply less adsorption and lower concentration gradients, which limit these effects. Variation in flow rates will have a greater impact on mass transfer than heat effects. Altering the flow rate will change factors such as axial dispersion and the mass transfer coefficient. These are concepts which likely have been taught in the Unit Operations classroom. Over the course of a semester, if the Unit Operations class is taught concurrently, the instructor should notice a change in performance on the experimental design when adsorption is taught in the classroom. If not, some feedback into the Unit Operations curriculum may be advantageous.

Technical Report and Technical Presentation

The final report and presentations are a post-assessment for the laboratory. The written report can be assessed directly for mathematical correctness and proper application. The most

Copyright © 2002, American Society for Engineering Education."

important areas of the written and oral reports are the explanation of trends and discrepancies. These statements require upper-level thought from the students (synthesis, evaluation, and judgment), and show their level of understanding of the material. For this laboratory, there are a number of important factors the students should address:

- *Temperature Traces*
  The temperature traces show the concentration front movement through the column. They also provide an indication of the magnitude of the heat effects in the column. This can, in some cases, be used to discriminate when heat effects are the dominant non-ideality or when mass transfer effects dominate.

- *Local Equilibrium Model*
  The students are instructed to construct equilibrium isotherms from desorption elution experiments. This requires integration and differentiation of data, and parameter fitting using the local equilibrium model. The fit provides the equilibrium isotherm up to the feed concentration of that run. From multiple experiments, there will be multiple elution curves, each of which can be analyzed. This provides two areas to assess students' understanding of the model.

  Since the components and the adsorbent are the same, students should fit the equilibrium parameters (q and b) globally for all runs. However, some students may try to fit a unique set of constants to each elution curve, especially if experiments have noticeable mass transfer and heat effects. Fitting each run separately shows the students are attempting to get the best fits possible without understanding what they are fitting (the equilibrium constants).

  With the constants fitted from their elution curves, students use the local equilibrium model to predict the same elution curves. At low feed concentrations, these curves should coincide well, but as higher concentrations are used, there will be greater disagreement between the model and the data. Students should be able to explain that the disagreement is due to the presence of mass transfer and heat effects, which are assumed negligible in the local equilibrium model. At higher concentrations, there are lager concentration gradients and more mass is adsorbed, which implies greater mass transfer effects and more heat generation in the adsorbent.

- *Model vs. Mass Balance*
  A primary point of assessment for this laboratory is between the two methods used to fit the equilibrium isotherm. Students are instructed to construct isotherms based on 1) adsorption breakthrough data and 2) desorption elution data. These two approaches lead to isotherms which differ. The desorption-based isotherm is computed by fitting the elution data to the local equilibrium model. The local equilibrium model assumes there are no mass transfer or heat effects. In contrast, the adsorption-based isotherm is computed from dynamic mass balances, which does not include these assumptions. The students' understanding of the local equilibrium model can be found in their explanation of why the two isotherms are different when they should coincide. Once they understand this, students should be able to explain the advantages and disadvantages of each

Copyright © 2002, American Society for Engineering Education."

approach. A good open-ended question would be to have the students postulate a "real-world" scenario when one method would be more appropriate than the other.

Design Problem

The design problem probes the students' approach to process design. In particular, it tries to focus on the use of a recycle loop and parameter shifting, which are vital to most separation processes. In an adsorption process, the bed must be regenerated after processing a given amount of feed. The problem with a single adsorption bed is that purging with pure helium requires more helium to purge the bed than is produced by the bed during separation.

One solution is to use two beds while purging at lower pressures than adsorption. This is the pressure swing adsorption process. The two beds are operated such that as one bed is producing product (adsorbing), the other is being purged with a portion of this product stream (the recycle loop) at a lower pressure. When the producing bed needs to be purged, valves can be switched to swap roles of the two beds – the purging bed becomes the adsorption bed, and the adsorption bed is purged. This design provides a continuous stream of high-purity product with a positive recovery of helium.

There are, of course, other possible designs which the students could propose. The main focus of the design problem is to understand how the students are trying to approach process design knowing the single unit operation behavior. How are they using the data they obtained? Are they using the models of the unit operation for prediction? What economics do they consider? This information can then be provided for the instructor of the process design class who can incorporate this as a pre-assessment for that course.

References

Cruz, P., A. Mendes, F. D. Magalhaes. "Using In-Bed Temperature Profiles for Visualizing the Concentration-Front Movement." *Chem. Engr. Edu.* 35(2). p. 122-139. 2001.

Satterfield, C. N. Heterogeneous Catalysis in Practice. McGraw-Hill: New York (1980).

Copyright © 2002, American Society for Engineering Education."

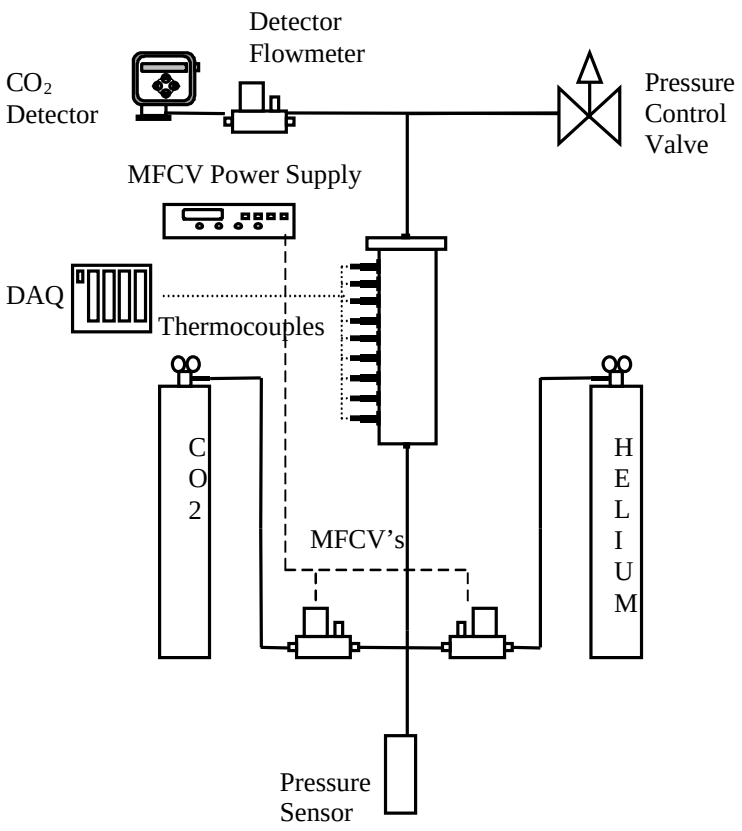

Figure 1. Schematic of the Fixed Bed Adsorption Breakthrough and Desorption Elution Apparatus.

"Proceedings of the 2002 American Society for Engineering Education Annual Conference & Exposition Copyright © 2002, American Society for Engineering Education."