Addressing Program Outcomes in a Freshman Introduction to Engineering Course

Ronald E. Barr, Thomas J. Krueger, and Ted Aanstoos

Mechanical Engineering Department
University of Texas at Austin

Abstract

Program outcomes are the knowledge, skills, and abilities that students should be able to demonstrate at the end of a degree program. ABET requires that accredited engineering departments must define a set of program outcomes, publicize them broadly to all constituents, and put into place a process for continuous assessment of the program outcomes. One of the biggest obstacles in assessment is the inability to engage students in the awareness of program outcomes and their importance in the curriculum. Many students see them as overly generalized statements that have no bearing on the concepts they need to pass a given course. Thus, dissemination of the notion and value of program outcomes is a major hurdle for the faculty. This paper suggests that engaging students at the freshman level in the departmental program outcomes is one strategy to foster a climate of their acceptance in later courses. Examples of freshman class assignments and projects that address specific program outcomes in a Mechanical Engineering department are presented.

Introduction

In the mid-1990's, the Accreditation Board for Engineering and Technology (ABET) developed a new set of criteria for accrediting engineering degree programs. Called EC2000, the new procedure requires engineering educators to define, promote, and rigorously assess their educational objectives and program outcomes. After some initial confusion and lack of guidance, EC2000 has now taken hold and is the required norm for all engineering programs. The main challenge for engineering faculty involved in ABET accreditation is to establish a continuous process of assessment and improvement of their educational programs. This process, called "Closing the Loop," involves the integration of constituents in meaningful dialog that leads to a better educational experience for the graduate.

The two major changes brought on by EC 2000 where embedded in Criteria 2 and 3 of the eight ABET criteria[1]. Criterion 2 states that engineering degree programs must define a set of educational objectives, promote those objectives to external interests, and have in place a mechanism to evaluate the success of their objectives. Although ABET was reluctant at first to define what was meant by educational objectives, recent agreement has resulted in the following definition: *Educational Objectives* are broad statements that describe the career and professional accomplishments that the program is preparing graduates to achieve several years after matriculation from the BS degree.

Copyright © 2005, American Society for Engineering Education

Criterion 3 states that engineering degree programs must define a set of program outcomes, promote those outcomes to all constituents, and have in place a mechanism to continuously assess the achievement of these outcomes. Although ABET was reluctant at first to define what was meant by program outcomes, recent agreement has resulted in the following definition: *Program Outcomes* are statements that describe what students are expected to know and be able to do by the time of graduation. These outcomes relate to the skills, knowledge, and behaviors that students acquire in their matriculation through the program.

Program Outcomes

ABET has published a list of eleven outcomes that they offer for general use by engineering programs. This list of ABET outcomes, commonly referred to simply as *(a) through (k)*, are listed in Table 1. The original intent was for this ABET list to serve as an example, from which each engineering program would fashion their own set of outcomes. In some cases, this did happen; but in other cases, programs just stayed with (a) through (k).

The Mechanical Engineering Department at the University of Texas at Austin (UT-ME) opted to establish their own set of program outcomes, as listed in Table 2. In this case, if a program establishes their own outcomes, then they must map to the ABET (a) through (k) outcomes. Such a mapping for the UT-ME outcomes to ABET outcomes is included in Table 2. While the UT-ME outcomes map completely to the ABET outcomes list, it has certain advantages over the ABET offerings. The UT-ME list establishes a clearer progression from hard technical competencies to the softer professional and contemporary expectations of the graduates. This logical progression of competencies makes it easier to present to interested constituents and for posting in public venues. In addition, some of the ABET outcomes seem to have overlapping content. For example, ABET outcomes (h) and (k) could easily be combined into a single outcome dealing with contemporary, global, and societal issues. Thus it appears that ABET itself could use some introspection and re-evaluation of its processes.

Table 1: ABET Outcomes (*a through k*).
(a) an ability to apply knowledge of mathematics, science, and engineering
(b) an ability to design and conduct experiments, as well as to analyze and interpret data
(c) an ability to design a system, component, or process to meet desired needs
(d) an ability to function on multi-disciplinary teams
(e) an ability to identify, formulate, and solve engineering problems
(f) an understanding of professional and ethical responsibility
(g) an ability to communicate effectively
(h) the broad education necessary to understand the impact of engineering solutions in a global and societal context
(i) a recognition of the need for, and an ability to engage in life-long learning
(j) a knowledge of contemporary issues
(k) an ability to use the techniques, skills, and modern engineering tools necessary for engineering practice.

Copyright © 2005, American Society for Engineering Education

Table 2: UT-ME Program Outcomes.
1. Knowledge of and ability to apply engineering and science fundamentals to real problems. (a*)
2. Ability to formulate and solve open-ended problems. (e)
3. Ability to design mechanical components, systems and processes. (c)
4. Ability to set up and conduct experiments, and to present the results in a professional manner. (b)
5. Ability to use modern computer tools in mechanical engineering. (k)
6. Ability to communicate in written, oral and graphical forms. (g)
7. Ability to work in teams and apply interpersonal skills in engineering contexts. (d)
8. Ability and desire to lay a foundation for continued learning beyond the baccalaureate degree. (i)
9. Awareness of professional issues in engineering practice, including ethical responsibility, safety, the creative enterprise, and loyalty and commitment to the profession. (f)
10. Awareness of contemporary issues in engineering practice, including economic, social, political, and environmental issues and global impact. (h,j)

* Mapping to ABET (a) through (k) outcomes

The Freshman Introduction to Engineering Course

Most engineering programs offer a freshman "Introduction to Engineering" course. The content of this introductory course varies from program to program, and there is no well-accepted curricular model for it. Programs typically use this course for student orientation to the engineering field, to teach problem solving, for design projects and contests, for developing communication and professional skills, for developing computing and software skills, and for potentially a host of other local interests. Some programs have also aligned this introductory course with an existing traditional engineering topic, such as engineering graphics, as is the case with the UT-ME program. There is also an opportunity to introduce the program outcomes in this course and to even establish some assignments that can be used for assessment purposes.

The UT-ME introductory course is ME 302 "Introduction to Engineering, Design, and Graphics." It consists of a one-hour common large lecture and 5 hours of laboratory work that includes some instructional lectures and testing time. Approximately 300 students register for this 3-credit hour course each year. The grading distribution for the course is shown in Table 3. Most of the points are garnered in the laboratory setting where students work individually on engineering and computers graphics exercises, and take their tests. However, the large lecture allocates 1000 points for assignments and for a final team project, which is also assigned and monitored in the large lecture. The rest of this paper focuses on the one-hour common large lecture, where the promoting of the UT-ME outcomes is most evident.

Table 3: Grading Distribution for ME 302 (points earned).	
Engineering Graphics Lab	680
Computer Graphics Lab	600
Lecture Assignments	500
Final Team Project	500
Tests and Final Exam	900
Total	3180

Copyright © 2005, American Society for Engineering Education

Outcomes Assignments

The assignments in the large lecture class focus on both individual work and team-oriented work. Many of the assignments can be directly mapped to one or more of the UT-ME program outcomes. Table 4 lists the assignments and maps them to the appropriate program outcome. The first assignment is divided into two parts. First the student completes a personality type indicator survey[2] form (similar to the Myers-Briggs Type Indicator), which is used for pairing up the teams. Ideally, each team is composed of four students who bring diversity to the group. Next, each student completes a resume, which is used for interpersonal skills development and for near-future professional employment opportunities (internship, externship, co-op). At this early point in the large lecture part of the course, the forms are evaluated and students are assigned to four-member teams.

Table 4: Assignments for the Large Lecture.

Assignment Topic	UT-ME Outcomes Addressed (Table 2)	ABET Outcomes Addressed (Table 1)
1a. Personality Type Survey	6, 9	f, g
1b. Resume	6, 9	f, g
2. Team Project Proposal	6, 7	d, g
3. Charts and Diagrams	6	g
4. Dissection Sketches	6	g
5. Solid Computer Models	3, 5, 6	c, k, g
6. Materials and Manufacturing Report	1, 6, 8	a, g, i
7. Ethics: Student Code of Conduct	9	f
8. Student Portfolio	6, 9	f, g

The second assignment begins the semester-long team project. The project consists of the reverse engineering of a mechanical assembly. The student teams survey available objects and write a proposal that describes the system they have selected. The instructor reviews the proposals and either accepts or rejects the object selected. More on the design project is discussed in a later section.

One objective of the course is to encourage the students to perform their project work in a timely manner, rather than waiting until the last week of the semester. To accomplish this, several components of the final project are assigned in the large lecture at regular intervals. In assignment three, they make charts and diagrams for their project. Specifically, they make a Gantt chart to show their project timeline, a black-box diagram to show the major input and output modes of the object, and a fishbone diagram to illustrate the dissection process.

The reverse engineering process starts with the product dissection. The student teams are expected to sketch the individual parts of the assembly on isometric grid paper (assignment four) and to then build solid computer models of the parts (assignment five). They work as teams and submit teams packets for these assignments. After a presentation by the engineering librarian, the student teams are required to submit a report (assignment six) on the materials and manufacturing processes used for their parts. This usually entails a literature search in the library and the inclusion of several citations in their reports.

Copyright © 2005, American Society for Engineering Education

The final two assignments are intended to broaden the students' experiences in the course and further promote the UT-ME outcomes. Assignment seven consists of a presentation and take-home exercise on engineering ethics. The lecture presents the ASME code of ethics for engineers and discusses the ramifications of this code on student conduct. The student teams are then asked to discuss ethics with their team members and to submit a list of five canons that could be incorporated into an ME student code of conduct. Typical canons that are developed and submitted are listed in Table 5.

Table 5: Fundamental Canons for an ME Student Code of Conduct.

1	Focus on learning: educate in technology, strive to grow intellectually, and respect faculty.	23*
2	Maintain, uphold, and promote the prestige of the profession.	15
3	Strive to be honest and impartial, and serve with fidelity the public, employees and clients.	13
4	Emphasize teamwork and inter-personal considerations in achieving goals.	13
5	Help others, particularly the ones in need.	12
6	Build professional reputation on the merits of fair service and intelligence, and do not compete unfairly.	10
7	Consider environmental impact in professional duties as an utmost priority.	9
8	Emphasize character building and personal growth.	9
9	Strive to promote and practice good safety habits first and foremost, and work only within one's capabilities.	7
10	Use knowledge and skills to the best of one's ability for the enhancement of human welfare.	6

***** Number of Times Mentioned by Teams Out of a Total of 27 Teams

The final assignment eight is an individual assignment in which the student creates a short portfolio[3] at a common departmental website: http://pro.engr.utexas.edu/portfolio/. The students are required to insert a digital photo of themselves, their resume (assignment one), a short bio-sketch, and at least one example project image, typically from their reverse engineering project. Currently, over 1,000 ME students have created a portfolio on the system since it has been a requirement in ME 302. The ultimate goal is to have all ME students generate an internet portfolio and to frequently update it with new project images as they matriculate through the curriculum.

While these eight assignments contribute to UT-ME outcomes (Table 4), other lectures that are not part of any assignment also contribute to the outcomes. A lecture on study abroad and international opportunities contribute to the students' understanding of globalization (UT-ME outcome number 10). Guest faculty lectures on materials science, nuclear engineering, and solar engineering contribute to the students' basic understanding of science and engineering (UT-ME outcome number 1). There are also occasional presentations from industry representatives such as Dow Chemical, Ford Motor Company, Applied Materials, and the U.S. Air Force. These talks bring practical, real-world information into the course lectures and motivate the students in their engineering studies.

Copyright © 2005, American Society for Engineering Education

Final Team Project

The final project[4] consists of a team of four students who reverse engineer a mechanical assembly, such as those illustrated in Figures 1 and 2. Through a dissection process, they study the individual parts, make sketches and computer models, perform various analyses, and make rapid prototypes of their assembly. At the conclusion of this integrated graphics and design project, the team assembles a final written report. The students use a final checklist (Table 6) that itemizes all the required components for the project report.

Table 6: Final Project Checklist.	√
Cover Page	
Written Description of Reverse Engineered Object	
Black Box Diagram Showing Object's Major Function	
Gantt Chart Showing Planning of Project	
Written Description of Dissection Process	
Fishbone Diagram Showing Object Dissection	
Exploded Assembly Sketch of Object Dissection	
Complete Parts List Showing Part Name, Number Required, and Material	
Isometric Sketches of Individual Parts	
Color Printout of Assembly Model	
Color Printouts of Each Computer Model Part	
Mass Properties Report of Each Model Part	
Materials and Manufacturing Analysis	
Rapid Physical Prototypes of the Parts	
Dimensioned Orthographic Drawings of the Parts	
Description of Potential Re-Design of the Reverse Engineered Object	
Final Project Grading Sheet	
Team Member Contribution Ranking Sheet	
Assembled Final Report With Suitable Binding, Boxing, and Outer Label	

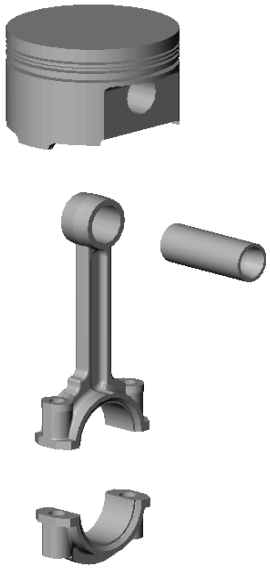

Figure 1: The Piston Assembly Example of a Reverse Engineering Object (Courtesy of Ford Motor Company).

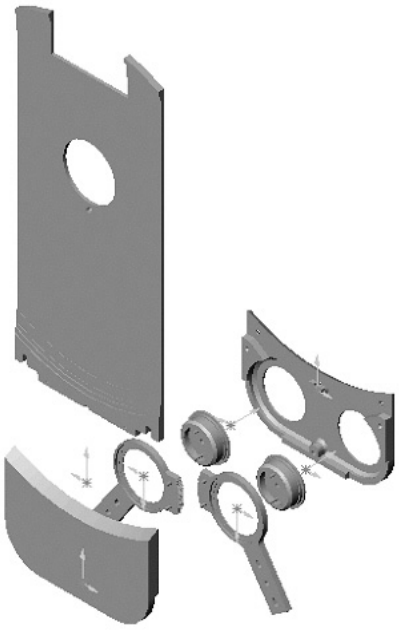

Figure 2: The Robotic Blade Assembly Example of a Reverse Engineering Object (Courtesy of Applied Materials).

Copyright © 2005, American Society for Engineering Education

Outcomes and Learning Factors Surveys

During the recent Fall 2004 semester, two surveys were conducted in the class to monitor the achievement of the UT-ME outcomes and other learning factors. An outcomes survey was conducted three times: at the beginning of the course (Pre), during the middle of the course (Mid), and then at the end of the course (Post). The survey consisted of asking the students to rank their skills and abilities supporting each of the ten outcomes (Table 2) at that stage of the course using the following 5-point scale:

1 No skill/ability
2 A little skill/ability
3 Some skill/ability
4 Significant skill/ability
5 Very significant skill/ability

The results of these outcomes surveys are shown in two ways. First, Table 7 shows the results in numerical rankings for Pre, Mid, and Post course rankings. Included is a course gain factor, which is the difference between the Post and Pre ranking scores. Second, the same results are shown in a comparative bar chart for visual inspection in Figure 3.

Table 7: Results of Outcomes Survey.

UT-ME Outcome	Pre	Mid	Post	Course Gain (Post-Pre)
1	2.96	3.14	3.45	0.49
2	3.23	3.23	3.54	0.31
3	2.43	3.38	3.70	1.27
4	2.85	3.01	3.36	0.51
5	2.88	3.67	4.04	1.16
6	3.41	3.51	3.83	0.42
7	3.46	3.85	4.17	0.71
8	3.56	3.49	3.58	0.03
9	2.89	2.80	3.40	0.51
10	2.58	2.59	3.07	0.50

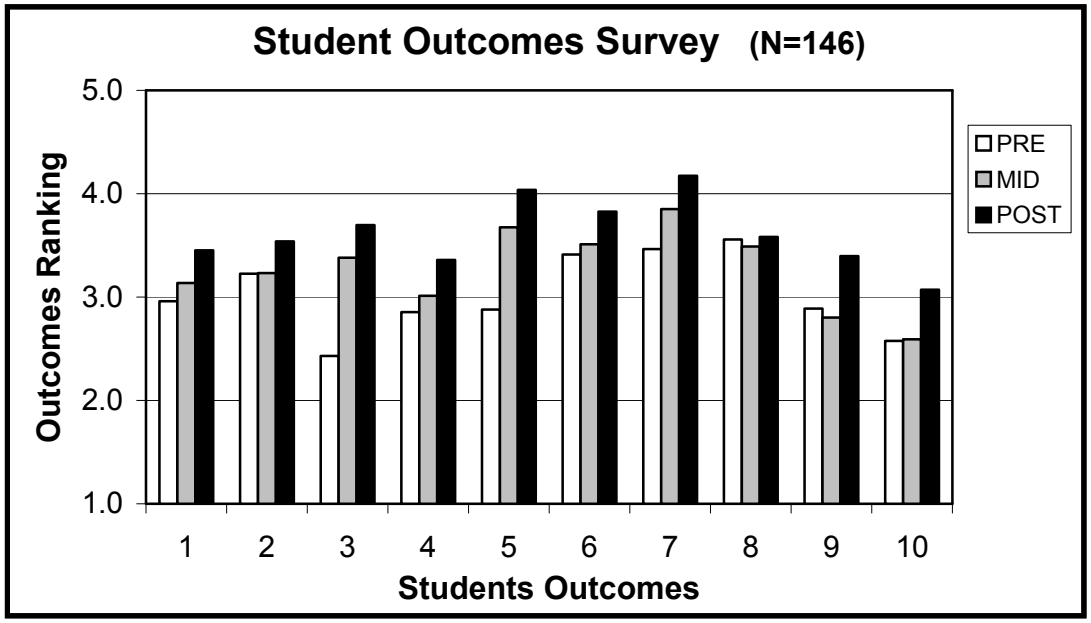

Figure 3: Results of Outcomes Survey in a Comparative Bar Chart.

Copyright © 2005, American Society for Engineering Education

A second survey was administered at the start and end of the semester. The survey asked the students to rank certain factors that may or may not enhance the quality of learning in the course. The seven factors posed to the students are listed in Table 8. They were asked to rate the quality of learning for each factor using the following 5-point scale: **5**. Exceptional, **4**. Good, **3**. Average, **2**. Below Average, and **1**. None.

Table 8: The Learning Factors Used in The Survey.
1. I gain factual knowledge (terminology, classifications, methods, trends).
2. I learn conceptual principles, generalizations, and/or theories.
3. I get a chance to talk to other students and explain my ideas to them.
4. I am encouraged to frequently evaluate and assess my own work.
5. I learn to apply course materials to improve my own thinking, problem solving, and decision making skills.
6. I develop specific skills, competencies, and points of view needed by professionals in the field.
7. I acquire interpersonal skills in working with others in the class.

Results of this learning factors survey are shown in two ways. First, Table 9 shows the results in numerical rankings for the Start and End course rankings. Included is a course gain factor, which is the difference between the End and Start scores. Second, the same results are shown in a comparative bar chart for visual inspection in Figure 4.

Table 9: Results of Learning Factors Survey

Learning Factor	Start	End	Course Gain
1	3.57	3.75	0.18
2	3.48	3.53	0.05
3	3.26	3.73	0.47
4	3.32	3.55	0.22
5	3.42	3.71	0.29
6	3.31	3.70	0.39
7	3.58	4.02	0.44

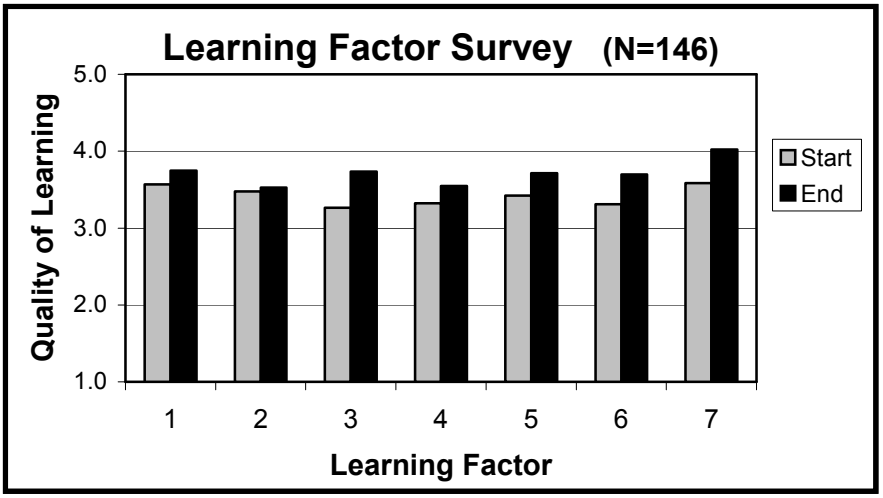

Figure 4: Results of Learning Factors Survey in a Comparative Bar Chart.

Copyright © 2005, American Society for Engineering Education

Discussion

The results of the two student surveys both show positive trends from the start to the end of the course. In the outcomes survey, six of the ten outcomes show a steady rise in the rankings from the Pre, through the Mid, and into the Post surveys. The three largest course gains in the outcomes rankings were for UT-ME outcome 3 (gain of 1.27), outcome 5 (gain of 1.16), and outcome 7 (gain of 0.71). This suggests that the students believe that the course contributed most to these following outcomes:

Outcome 3 - Ability to design mechanical components, systems and processes,
Outcome 5 - Ability to use modern computer tools in mechanical engineering, and
Outcome 7 - Ability to work in teams and apply interpersonal skills in engineering contexts.

This is a gratifying result since the unifying theme of the course was centered around the team project, which had a design component, a strong computer applications component, and an engrossing climate of team work throughout the semester.

The results of the learning factors survey further amplified the above observation. The learning factors with the three largest course gains were factor 3 (gain of 0.47), factor 7 (gain of 0.44), and factor 6 (gain of 0.39). This suggests that the learning factors that helped students achieve their course goals included the following:

Learning Factor 3 - I get a chance to talk to other students and explain my ideas to them,
Learning Factor 7 - I acquire interpersonal skills in working with others in the class, and
Learning Factor 6 - I develop specific skills, competencies, and points of view needed by professionals in the field.

These learning factors survey results are in strong concurrence with the overall objectives of the course. Developing interpersonal team skills and developing professional competencies in design, particularly in solid computer modeling and its applications, are major goals of the course.

It has been pointed out that student opinion surveys, as discussed above, are "indirect" measures of program outcomes. While the data in Figures 3 and 4 are very useful for course planning, ABET expects faculty to apply more "direct" measures in assessing student outcomes. One proposition is to have a panel of faculty evaluate the final team project reports and rank the accomplishment of the ten outcomes for each report. From there, a statistical overview for the whole class could be compiled. This compilation would seem to be a reasonable complement to the student surveys and would directly involve faculty expertise in measuring the achievement of student outcomes in the course.

Conclusions

While it is unlikely that a freshman engineering course can contribute to every one of the outcomes listed for a particular program, this study suggests that some student outcomes can be successfully addressed in the first year. Furthermore, engaging students at the freshman level in the departmental program outcomes is one strategy to foster a climate of their acceptance in later courses. This early experience will serve as a building block for successful achievement of student outcomes in their future courses.

Copyright © 2005, American Society for Engineering Education

Bibliography

1. Engineering Accreditation Commission, *Criteria for Accrediting Engineering Programs*, Accreditation Board for Engineering and Technology (ABET), Baltimore, Maryland, 2004.

2. Insight Reporting System, http://www.win.net/insightsys/question.htm

3. Campbell, M. and Moore, C.: Web-Based Engineering Portfolio System, *Proceedings of the 2003 American Society for Engineering Education Annual Conference & Exposition*, Nashville, Tenn., June 2003.

4. Barr, R., Krueger, T., and Aanstoos, T.: Industry-Sponsored Design Projects for Freshman Engineering Graphics Students, *Proceedings of the 2002/03 Midyear Meeting of the Engineering Design Graphics Division of ASEE,* Indianapolis, Indiana, October 2002.

Biographies

Ronald E. Barr is a Professor of Mechanical Engineering at the University of Texas at Austin, where he has taught since 1978. He received both his B.S. and Ph.D. degrees from Marquette University in 1969 and 1975, respectively. Barr was voted President-Elect of ASEE in 2004 and will serve as ASEE President in the 2005-2006 term. Barr is a Fellow of ASEE and a registered Professional Engineer (PE) in the state of Texas.

Thomas J. Krueger is a Teaching Specialist in the Mechanical Engineering Department at the University of Texas at Austin, where he has taught since 1994. He received his B. S. from Concordia Teachers College in 1966 and his M. Ed and Ph.D. from Texas A&M University in 1971 and 1975 respectively. Before coming to the University of Texas at Austin, Krueger taught at Texas A&M University, Brazosport College, and Texas State University.

Theodore A. Aanstoos is a Senior Lecturer in the Mechanical Engineering Department at the University of Texas at Austin, where he has taught since 2001. He received his B.S. and M.S. degrees in Mechanical Engineering from the University of Texas at Austin. He served as a design engineer for 22 years at the Center for Electromechanics. Aanstoos is a Fellow of ASME and a registered Professional Engineer (PE) in the state of Texas.

Copyright © 2005, American Society for Engineering Education