AC 2011-444: AN INQUIRY-GUIDED LEARNING APPROACH TO PROCESS INTEGRATION, SIMULATION, AND ECONOMICS

Lale Yurttas, Texas A&M University

Lale Yurttas received her Ph.D. degree in Chemical Engineering from Texas A&M University in 1988. She has worked as a research associate in Engineering and Biosciences Research Center and conducted research in areas of biomass conversion, protein folding and stability, and biological membrane thermodynamics until1996. She is currently a senior lecturer in Chemical Engineering Department at Texas A&M University and serves as the Assistant Department Head for the Undergraduate Program. She has extensive teaching experience in sophomore through senior level classes with excellent reviews. As a co-PI, she has received significant funding from NSF in engineering education and curriculum renewal. She serves as the advisor to the AIChE Student chapter which won the Outstanding Student Chapter Award in 2004, and 2009. She chairs the Students Affairs Committee and ABET Committee in the Chemical Engineering Department. She has received the Student AIChE Teacher of the Year award in 2003 and AIChE Mentor of the Year award in 2004, 2005, 2006, and 2008, and TAMU President's Award for Academic Advising in 2007. Her current research interests are in engineering education; in particular in the areas of undergraduate curriculum reform, development, and assessment; incorporation of environmental sustainability; service learning; and development of online web modules for instruction.

Dr. Mahmoud M El-Halwagi, Texas A&M University
Houssein A Kheireddine, Texas A&M University

I am Ph.D Chemical Engineering student at Texas A&M University. I work in the area of optimization and integration.

Dissertation topic: Sustainable Design through Process Simulation, Integration, and optimization

Ongoing research:

Simulation and design of integrated biorefineries for the conversion of biomass to biofuels Pollution prevention and water conservation via mass, energy, and property integration Design of integrated processes for lube oil reclamation and recycle

An Inquiry-Guided Learning Approach to Process Integration, Simulation, and Economics

Lale Yurttas[1], Houssein Kheireddine, and Mahmoud El-Halwagi

Chemical Engineering Department, Texas A&M University, College Station, TX 77843, USA

This paper provides an overview of how inquiry-guided learning (IGL) has been introduced into the first senior-level design course at Texas A&M University (Process Integration, Simulation, and Economics). This has been part of an NSF-sponsored project to reform the chemical engineering undergraduate curriculum. First, the paper describes the course content and how the aspects of integration, simulation, and economics are integrated. Then, focus is given to two computer-aided modules (interlinked curriculum components or ICCs) that were developed to foster the students' IGL experience in the areas of mass and energy integration. Each ICC includes the following elements:

- Pretesting
- Background
- Examples
- Exercises
- Post-testing

The following sections describe these elements.

The pretesting section of the ICC includes a set of multiple-choice questions. The key objective is to determine the level of competence of each student prior to taking the course. The students' scores are recorded online and reported to the instructor. Students failing to pass a certain level of competency are required to review pre-requisite materials and to re-take the pretest.

The background section contains an overview of process integration. It describes the key concepts in mass and heat integration along with common approaches, terminologies, and illustrative examples. Special emphasis is given to the concept of targeting to benchmark the process performance ahead of detailed design using systematic tools (e.g., pinch analysis) [El-Halwagi, 2006].

In order to illustrate the proposed approaches, the background section is followed by an example section. This section contains a number of mass and heat integration examples that serve as practice problems. The examples allow the students to explore different options that satisfy the

[1] Corresponding author. Phone:(979) 847-9316, Fax: (979) 845-6446

E-mail address: l-yurttas@mail.che.tamu.edu

targets. Students are encouraged to generate multiple pathways that meet the target while including the targeting rules.

A computer aided tool (Java script) is used for the construction of the exercises section. This section is unique because it gives the user a variety of options on how to approach the problem. Because of the nature of process integration, many solutions are feasible, but not all of them can reach the target. In the mass-integration exercise, a recycle problem is presented to the students. Data for process streams and units as well as constraints on acceptable recycles are given. As the user defines the flowrates assigned from the process streams (sources) to the process units (sinks), infeasible solutions are detected and the student's score is penalized. When a feasible solution is finally obtained, the grade is assigned based on the number of trials and the ratio of the student's answer to the optimal value. Figures 1 and 2 are snapshots of the graphical user interface (GUI) for the mass-integration exercise.

Solution

	Sink 1	Sink 2	Sink 3	Sink 4	Waste	Total Source
Source 1						
Source 2						
Source 3						
Source 4						
Fresh						
Total Sink						

Submit Reset

Figure 1: Mass integration solution table

Solution

	Sink 1	Sink 2	Sink 3	Sink 4	Waste	Total Source	
Source 1	20	50				70	Exceeds Available Flowrate!
Source 2							Less than Available Flowrate!
Source 3		50				50	Less than Available Flowrate!
Source 4							Less than Available Flowrate!
Fresh	30					30	Unfeasible!
Total Sink	50	100					
			Less than Required Flowrate!	Less than Required Flowrate!			
		Exceeds Maximum Allowable Concentration!					

Figure 2: Mass integration error messages.

In the heat integration exercise, a list of hot and cold streams is given along with their heat duties. The user is asked to perform targeting of minimum heating and cooling utilities as well as hot-cold stream mapping. Many pop-up and error messages are used in order to guide the user to a correct solution. A help button is also available. Points are deducted for each pop-up/error message and for clicking the help button. Figure 3 shows a typical table of data.

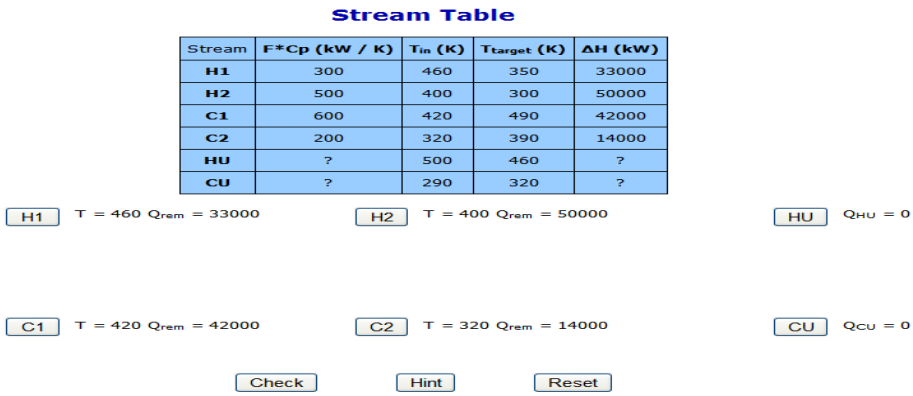

Figure 3: A typical table for heat integration

The streams can be connected and the user is requested to enter the exchangeable heat load between the two streams. If the transferred heat load violates a major constraint, a pop up message appears (Fig. 4).

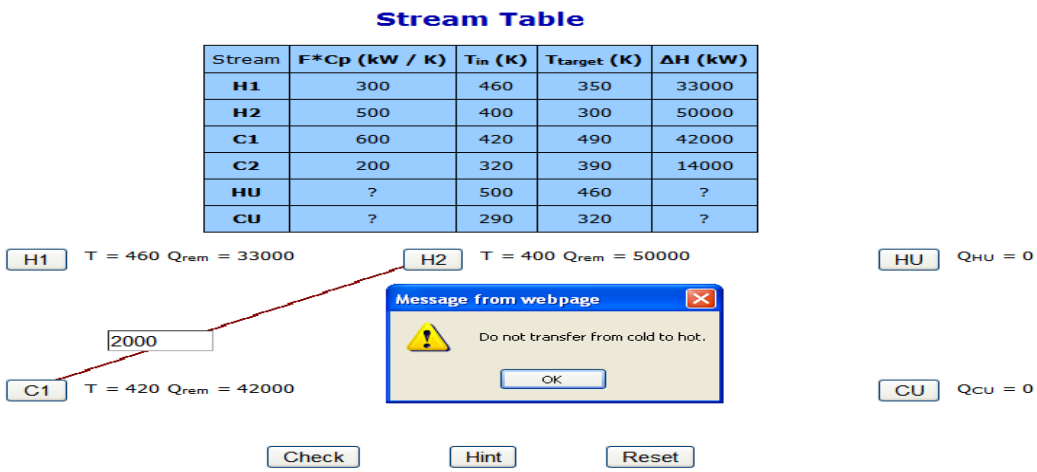

Figure 4: An example of a heat-integration error pop-up message

Finally, the user is allowed to enter a final solution. Once the “check” button is clicked, a detailed graphical representation of the user’s solution is displayed as shown by Fig. 5.

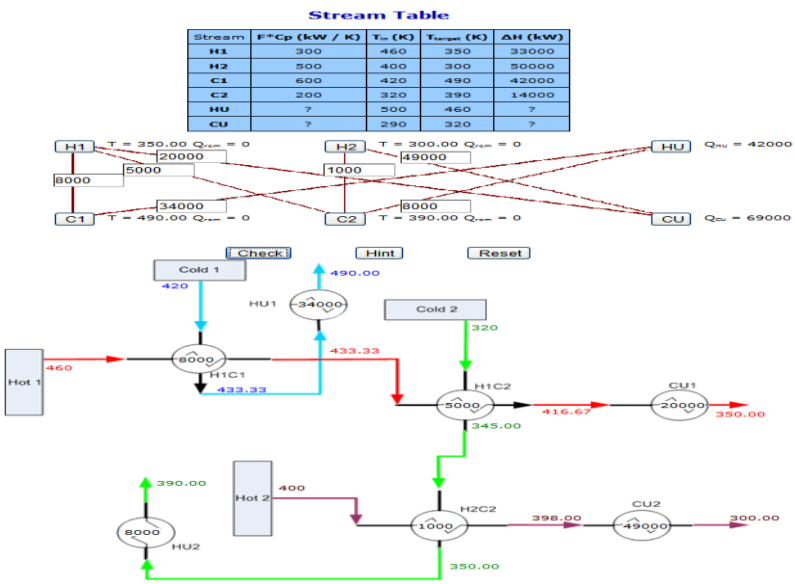

Figure 5: Graphical representation of the suggested heat integration solution

To finish, the post-testing section follows the exercises. This section contains the same multiple-choice questions asked in the pre-testing phase but in a different order. The purpose of this section is to benchmark the user's progress and improvement. This section is also graded and the scores are sent to the instructor.

The presentation will include a demonstration of the ICCs and the hosting web site. A public version of the ICCs is available at http://alcheme.tamu.edu/ .

Bibliography

El-Halwagi, Mahmoud. 2006. *"Process Integration"*, Elsevier.