Completing a Lab in 50 Minutes: Optimizing Student Attention Span

Jennifer Felder Marley, Valparaiso University

Jennifer Marley is an assistant professor of electrical and computer engineering at Valparaiso University. She received the B.S. degree in electrical engineering from North Carolina State University and M.S. and Ph.D. degrees in electrical engineering: systems from the University of Michigan. Her research interests include power system optimization and the integration of storage devices and renewable generation.

Dr. Doug Tougaw, Valparaiso University

Doug Tougaw is a professor of Electrical and Computer Engineering at Valparaiso University. His scientific research is in the area of nanotechnology. His pedagogical research interests include working with first-year students, design, ethics, and computer programming.

Completing a Lab in 50 Minutes: Optimizing Student Attention Span

Jennifer Felder Marley and Douglas Tougaw
Valparaiso University, jennifer.marley@valpo.edu, doug.tougaw@valpo.edu

***Abstract* – Accommodating students' relatively short attention spans is a significant challenge when designing a first-year engineering course. It is increasingly difficult for first-year students to maintain their focus throughout a 150-minute laboratory session. An alternative is to create laboratory experiences that provide students with self-contained hands-on experiences that can be completed within a traditional 50-minute window. In electrical and computer engineering, this is challenging, since so many of the laboratories require extensive wiring and, possibly, programming. We describe a set of 24 hands-on laboratories in which students perform a significant experiment within a 50-minute period. The labs are written to explore analog circuits, digital circuits, and programming embedded microcontrollers. Completing these experiments in 50 minutes is made possible by making just a few adjustments to the lab exercises and by providing a few key supporting structures for students. These one-period labs were taught for the first time last academic year, and they are currently being used for a second time with a few small revisions. Assessment results are presented that demonstrate these labs are beneficial to students' achievement of course learning objectives.**

Index Terms – First-Year, Laboratory, Circuits, Digital, Programming.

INTRODUCTION

Many challenges face faculty who wish to develop an effective first-year engineering course. One of these challenges is the need to engage students who likely have more in common with high school seniors than they do with college sophomores. In particular, first-year engineering students seem to have an observably shorter attention span than their more senior counterparts. One way to overcome this challenge is to engage the students in active learning, including laboratory work. However, a typical engineering lab is three periods (two-and-a-half hours) long, and even with the engagement that comes from active learning, it is difficult to maintain their interest for such a long uninterrupted period of time.

One possible way to address the problem of a lengthy lab would be to break the lab down into three shorter lab periods, where the students would complete one-third of the lab in each period. However, there is a great deal of logistic and pedagogical overhead to such a strategy, especially requiring the students to reconnect their lab setup and to remember where they were in the lab procedure.

Instead, we propose that students be given the support necessary to complete a substantial laboratory experience in just one academic period of 50 minutes. This can be accomplished using a combination of four strategies:

- Writing lab handouts that include a higher-than-usual amount of detail.
- Recording and publishing pre-lab briefing videos that demonstrate what students can expect to see in lab.
- Providing students with partially wired "baseline breadboards" that are already populated with the components they will need and already include all basic power and ground connections.
- Providing students with electronic copies of program templates that can be modified to meet the required functionality of the final project.

BACKGROUND

The relatively short attention span of modern college students has long been recognized [1], as have strategies for overcoming this challenge. Substantial evidence exists that active learning provides a significant benefit for helping students to stay focused and to learn material more effectively [2]. Traditionally, laboratories have been the primary opportunity most engineering students have for active learning. The laboratory is an essential part of any engineering curriculum, and its purpose is two-fold—to reinforce information learned in the lecture and to prepare students with the essential hands-on tools they will need to bring to the engineering workplace [3].

Some first-year laboratory experiences have been designed around software simulations [4], but most focus on hands-on work with relevant hardware [5]-[6]. It has also been shown that students who are exposed to significant team-based hands-on experiences show improved collaboration, teamwork, and communication skills [7]. Laboratories are also a critical component of courses that are designed to motivate students to persist in their engineering major [8], and students whose first-year courses incorporate significant hands-on work have been shown to have a higher retention rate [9]. Students who prefer laboratory work have been shown to view engineering courses as "increasing one's

knowledge," "applying," "understanding," and "seeing in a new way" as compared to students who prefer lecture classes, who tend to view engineering courses as "testing" and "calculating and practicing" [10]. While calculating and practicing are certainly important for learning engineering, it seems that increasing one's knowledge and seeing things in a new way is a more beneficial mental framework for engineering students.

Mastery experiences, such as successfully completing a challenging laboratory project, have been shown to increase students' self-efficacy, their confidence in their own ability to complete a task. Self-efficacy and confidence are important predictors of retention, especially among female students [11].

Recently, a great deal of research has also been done to investigate the effectiveness of "flipped" classes, those in which basic information and facts are conveyed to the students outside of the classroom, while class time is spent investigating areas of confusion and learning to apply the new information and facts. Modern video technology is often used in the asynchronous portions of such classes, while the class meetings themselves are very active and often filled with hands-on experiences. Research has shown that even partially flipped courses promote student learning [12], and that flipped classrooms are particularly effective at teaching students the fundamentals of engineering design [13]-[14]. Electrical and computer engineering topics, in particular, have been shown to be prime candidates for the introduction of flipped classroom methods [15].

IMPLEMENTATION

ECE 100, Fundamentals of Electrical and Computer Engineering, is a course taught to all second-semester ECE students at our university. The content for this course is divided evenly among three topics: analog circuits, digital logic, and programming with Arduino microcontrollers. This course was recently adapted from an earlier course sequence, taught for over 20 years, which was half analog circuits and half digital logic.

ECE 100 is taught in a flipped orientation, with homework consisting of watching video lessons and reading background material, then completing in-class exercises, quizzes, laboratory experiences, and design projects during the class periods. Of the 56 class meetings, 24 are dedicated to laboratory experiences, each of which takes place in one 50-minute class period.

The analog circuits lab topics range from an introduction to voltage, current, and Ohm's law, all the way up to relatively complex amplifier circuits, as shown in Figure 1. This circuit allows the students to amplify two different audio sources, a microphone and an audio input jack, and to mix them using a summing amplifier. The result is a real-world amplifier circuit that allows them to mix their own voice along with an audio source such as a radio or their own cell phone.

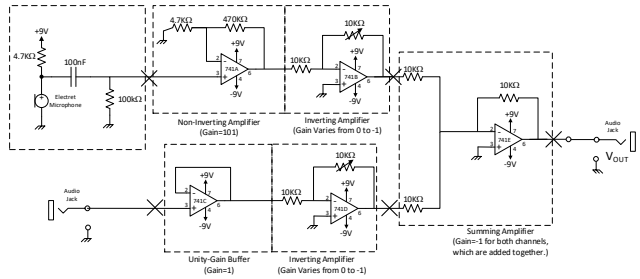

FIGURE 1
AMPLIFIER CIRCUIT SCHEMATIC

Figure 2 shows how this circuit is partially pre-constructed when students arrive in lab. All of the circuit elements are populated on the board, along with flush-connected power and ground wires and fixed-value resistors. Students are required to test the individual amplifier blocks with a function generator and power supply, and then they hook the blocks together using jumper wires before testing the full circuit.

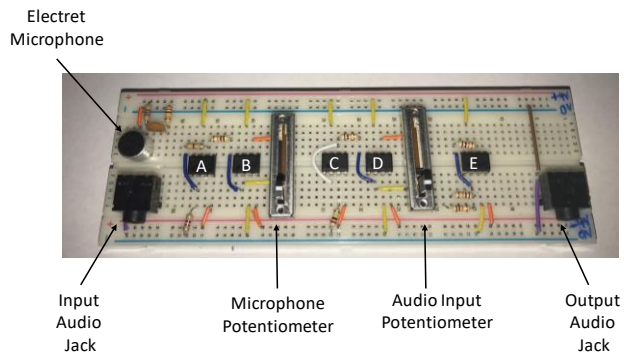

FIGURE 2
PRE-BUILT AMPLIFIER CIRCUIT

Similar methods are used on the digital side, with students starting with simple gates and working their way up to more and more complex circuits. Ultimately, they learn about full adders, ripple adders, and two's complement arithmetic, allowing them to construct an eight-bit adder/subtractor, shown schematically in Figure 3.

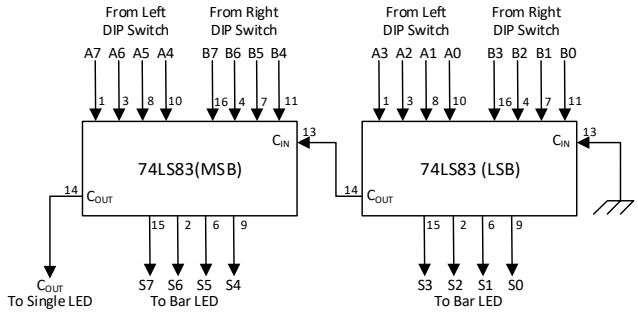

FIGURE 3
SCHEMATIC OF AN EIGHT-BIT ADDER/SUBTRACTOR

In the programming laboratories, students work with an Arduino microcontroller. Over the course of the semester, they perform 13 microcontroller experiments:

- Microcontroller basics / digital outputs
- Switches/digital inputs / branching
- Loops
- Interfacing to Liquid Crystal Displays
- Interfacing to DC motors
- Interfacing to Piezo Speakers / Using functions
- Interfacing to Servomotors / Pulse-width modulation
- Interfacing to Keypads
- Analog inputs
- Interfacing to Joysticks
- Infrared transmitters and receivers
- Interfacing to Microphones
- Wireless communication / Stepper motors

In each case, students are provided with a complete or nearly complete program to complete a simple task, and then they must modify it repeatedly to perform increasingly complex tasks. By the end of the semester, the students have learned about many important electrical sensors and actuators, and they have also begun to build a foundation of programming knowledge, especially in the C programming language.

The semester culminates in a final design project, where the students must integrate all three components of the course (analog circuits, digital circuits, and embedded microcontroller programming) to create a soccer-playing robot. The projects are fully tested to establish students' grades, and then they have the opportunity to play in a 25-team soccer tournament against all the other first-year students at our university's annual Engineering Design Expo. This is a fun and exciting day that provides a capstone to their first year of engineering coursework.

RESULTS

To evaluate the proposed method, 43 first-year engineering students who are currently enrolled in the first-year engineering course were asked to complete a survey. The goal of this survey was to assess how easily and successfully students are able to perform in the 50-minute laboratory session. Additionally, 37 sophomore students responded to a survey, sharing their perception of how well this first-year engineering course prepared them for various courses taken later in the curriculum.

Together, these surveys provide a broad perspective of the impact of this course. The first focuses on ensuring that students have a positive, encouraging experience and have sufficient resources to accomplish significant laboratory experiments in a timeframe that is adapted to their attention spans. The latter examines how well those experiences translate into success in future courses. Both of these factors must be considered in a successful course design.

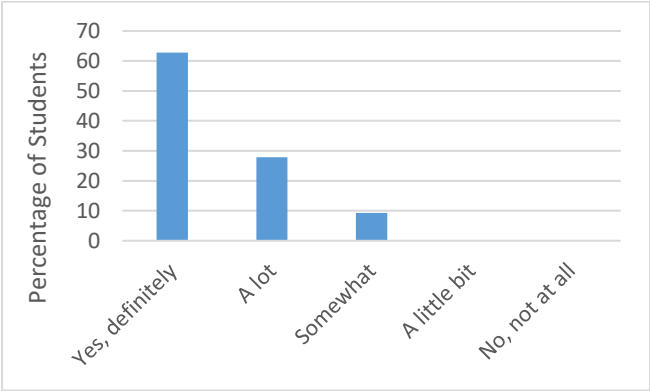

FIGURE 4
PERCENT OF STUDENTS WHO REPORT THEY ARE ABLE TO STAY FOCUSED ON THE LAB FOR THE FULL 50 MINUTES.

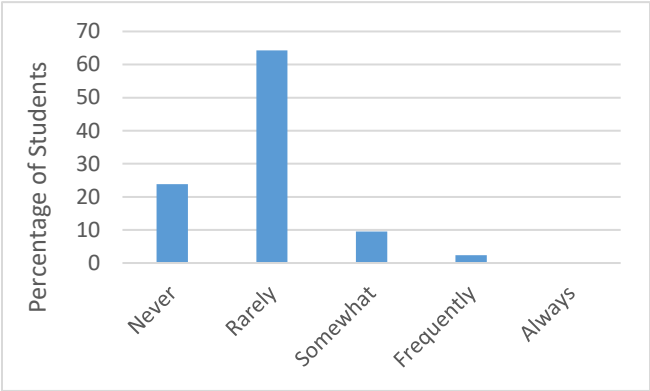

FIGURE 5
PERCENT OF STUDENTS WHO REPORT THEY FEEL RUSHED TO COMPLETE THE LABS IN THE TIME AVAILABLE.

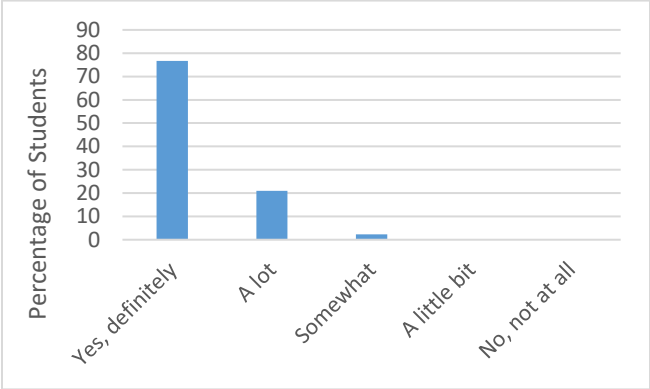

FIGURE 6
PERCENT OF STUDENTS WHO REPORT THEY ARE ABLE TO GET THE HELP THEY NEED WHEN THEIR CIRCUIT DOES NOT WORK PROPERLY.

I. Survey of First-Year Students

The first-year students who are currently enrolled in the first-year engineering course responded to a survey approximately half-way through the semester, after they had completed several laboratory experiments. The questions were designed to gauge their focus during lab sessions, their ability to

comfortably complete the labs in 50 minutes, and the level of help received from the instructor during class. The results of this survey are summarized in Figures 4 – 6 and demonstrate the positive experience students have in this course.

As shown in Figure 4, 91% of students reported that they definitely or a lot of the time were able to remain focused for the full 50-minute laboratory session. This response further motivates the choice to shift to shorter lab sessions to address students' short attention spans and provide a meaningful active-learning environment. Moreover, 88% of students reported that they rarely or never felt rushed to complete the labs in the 50-minute time period (Figure 5). This highlights the benefit of the extensive lab handouts and pre-wired breadboards provided to students. With these additional resources, students are able to focus on the new concepts and/or hardware introduced in each lab, rather than devoting a significant amount of time to tasks that do not support the objective of the experiment.

Before arriving at each lab session, students are required to watch videos that include a demonstration of the final circuit or code they are expected to produce. Students are often able to answer many of their own questions using these additional resources. This enables the instructor to help students who are struggling with more significant issues. As a result, 98% of students reported that they definitely or a lot of the time were able to receive help when their circuit did not work properly (Figure 6). This is a significant factor in reducing student frustration and providing an encouraging environment for them to first encounter this challenging material.

II. Survey of Sophomore Students

This first-year engineering course serves as the foundation for several courses in the electrical and computer engineering curriculum. Two courses in particular rely upon the background provided by this course: a sophomore linear circuit theory course and a sophomore digital logic design course. The latter has both a lecture and laboratory component. Sophomore students responded to a survey that assessed how well prepared they were for these courses. The results of this survey are given in Figures 7 – 9. Students reported that they are able to explore topics from these sophomore-level courses in more depth than would be possible without these support materials. As a result, they feel well-prepared for subsequent courses.

Students responded that the first-year engineering course prepared them most for the linear circuit theory lecture. In fact, Figure 7 shows that 95% of students felt that it at least somewhat prepared them for this course. The majority of sophomore students also felt prepared for their digital logic design lecture and laboratory, as demonstrated by 84% and 76% of students reporting that they were at least somewhat prepared for these, respectively (Figures 8 and 9).

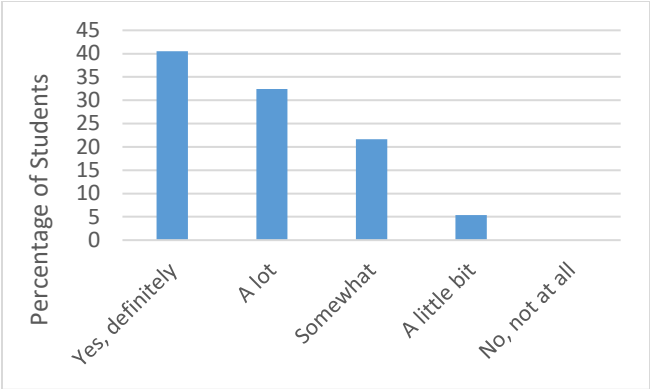

FIGURE 7
PERCENT OF STUDENTS WHO REPORT THAT THE FIRST-YEAR ENGINEERING COURSE PREPARED THEM FOR THEIR LINEAR CIRCUIT THEORY LECTURE

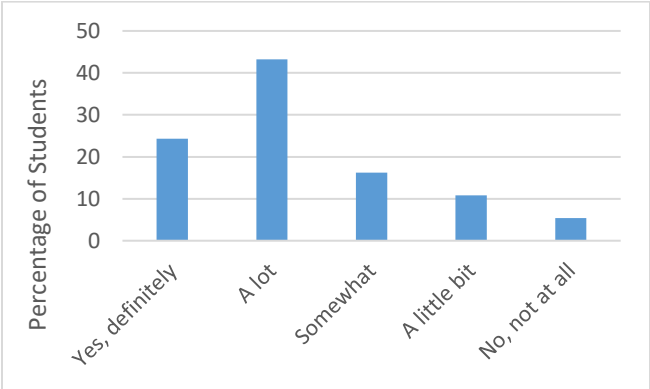

FIGURE 8
PERCENT OF STUDENTS WHO REPORT THAT THE FIRST-YEAR ENGINEERING COURSE PREPARED THEM FOR THEIR DIGITAL LOGIC LECTURE

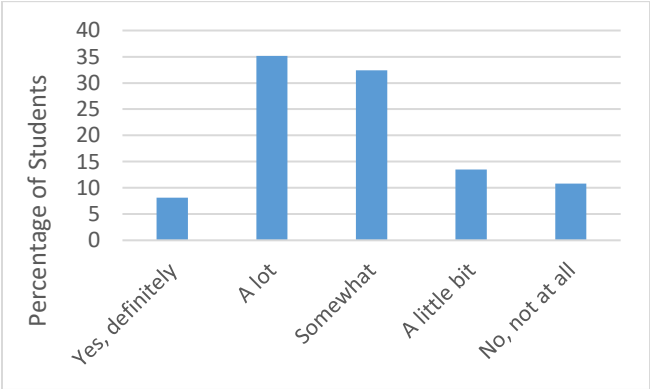

FIGURE 9
PERCENT OF STUDENTS WHO REPORT THAT THE FIRST-YEAR ENGINEERING COURSE PREPARED THEM FOR THEIR DIGITAL LOGIC LABORATORY

DISCUSSION

Compared to longer laboratory sessions, a 50-minute period aligns well with the length of student attention spans. However, the challenge of this shorter class period is ensuring that students are provided with adequate resources so that they are able to accomplish significant experiences in the allotted time. We have proposed and implemented a course design that relies upon three strategies to accomplish

this goal. First, students are required to watch briefing videos that describe the goal of the lab and demonstrate the final deliverable that students must produce. Second, the procedure handouts provide additional reference information and tips for accomplishing the lab. Oftentimes, students are able to answer their own questions during lab by using these two resources. Finally, students are supplied with either pre-wired breadboards or a partially completed piece of code, depending on the context of the particular experiment.

This provides students with a functional basis from which to begin their experiments, reducing the initial frustration that can arise when they encounter new concepts. The emphasis of each lab is then modifying this base circuit or code to perform a specified task. As such, this approach allows students to focus on the particular learning objective of each lesson and to explore the abstract concepts being reinforced in the lab on a deeper level. By implementing these strategies, students in the first-year engineering course are able to accomplish experiments of the same scope and difficulty level as is possible in longer class periods.

This extensive preparation, both from the perspective of the instructor and the students, offers several benefits to students. As students have additional resources at their disposal during labs, they frequently can find answers to their questions without the help of the instructor. As a result, the instructor has the opportunity to circulate and assess student progress, or to address deeper issues that students may encounter. At the same time, students gain experience assessing their own work and build confidence in their ability to perform difficult laboratory skills. Another advantage of this approach is that students devote a significant amount of time outside of class to prepare for each experiment. They thus arrive with a clear understanding of what they must accomplish, and in most cases have also seen a video demonstration of how to do so. As a result, they do not feel rushed to complete the experiments, even though the length of class time has been reduced.

The positive experience achieved through this course design prepares students well for their future courses, which is the goal of any first-year engineering course. Sophomore students reported that they felt this course was particularly useful in their linear circuit theory lecture and digital logic design lecture and laboratory. These courses are typically very challenging, as they involve abstract concepts that students may find difficult to directly relate to lab experiments. Most topics covered in the first-year engineering course relate closely to these courses, suggesting that the labs successfully reinforce these abstract concepts with which students often struggle. Thus, the proposed course successfully prepares students for later courses, providing them many of the benefits of a longer class period while reducing the length of each lab to allow them to stay focused for the entire period.

ACKNOWLEDGMENT

The authors wish to acknowledge the support of the Valparaiso University College of Engineering and the Department of Electrical and Computer Engineering.

REFERENCES

[1] Ambrose, S.A. and Amon, C.H., "Systematic Design of a First-Year Mechanical Engineering Course at Carnegie Mellon University," *Journal of Engineering Education*, Vol. 86, No. 2, pp. 173-181.

[2] Prince, M., "Does Active Learning Work? A Review of the Research," *Journal of Engineering Education*, Vol. 93, No. 3, pp. 223-232.

[3] Feisel, L. D. and Rosa, A.J., "The Role of the Laboratory in Undergraduate Engineering Education," *Journal of Engineering Education*, Vol. 94, No. 1., pp. 121-130.

[4] Campbell, J.O., Bourne, J.R., Mosterman, P.J., and Brodersen, A.J., "The Effectiveness of Learning Simulations for Electronic Laboratories," *Journal of Engineering Education*, Vol. 91, No. 1, pp. 81-88.

[5] Ossman, K. A., and Bucks, G. W., "Adding Hardware Experiments to a First-Year Engineering Computing Course," *Proceedings of the 2017 ASEE Annual Conference*.

[6] Fentiman, A., Gustafson, R. J., Merrill, J., Demel, J., and Freuler, R., "Developing And Implementing Hands On Laboratory Exercises And Design Projects For First Year Engineering Students," *Proceedings of the 2001 Annual Conference*.

[7] Love, J. O., Freeman, S. F., Jaeger-Helton, K., and Whalen, R., "No Lab? No Shop? No Problem: Intentional Design of a First-year Engineering Learning Center with Enlightening Outcomes," *Proceedings of the 2015 ASEE Annual Conference*.

[8] Carlson, B., Schoch, P., Kalsher, M., and Racicot, B., "A Motivational First-Year Electronics Lab Course," *Journal of Engineering Education*, Vol. 86, No. 4, pp. 357-362.

[9] Lord, S. M., Macedo, J. A., and Olson, R. T., "A 'Nifty' Laboratory for First Year Engineering Students," *Proceedings of the 2000 ASEE Annual Conference*.

[10] Lin, C. and Tsai, C., "The Relationships between Students' Conceptions of Learning Engineering and their Preferences for Classroom and Laboratory Learning Environments," *Journal of Engineering Education*, Vol. 98, No. 2, pp. 193-204.

[11] Hutchison, M.A., Follman, D. K, Sumpter, M., and Bodner, G.M., "Factors Influencing the Self-Efficacy Beliefs of First-Year Engineering Students," *Journal of Engineering Education*, Vol. 95, No. 1, pp. 39-48.

[12] Everett, J. W., & Morgan, J. K., & Stanzione, J. F., & Mallouk, K. E., "A Hybrid Flipped First-Year Engineering Course," *Proceedings of the 2014 ASEE Annual Conference*.

[13] Saterbak, A., Wettergreen, M., and Roberts, Z., "Teaching First-Year Engineering Design Using a Flipped Classroom Model," *Proceedings of the 2016 ASEE Annual Conference*.

[14] Bringardner, J and Jean-Pierre, Y., "Evaluating a Flipped Lab Approach in a First-Year Engineering Design Course," *Proceedings of the 2017 ASEE Annual Conference*.

[15] Yelamarthi, K., and Drake, E. E., "Increasing Student Learning and Interest in a Flipped First-year Electrical and Computer Engineering Course," *Proceedings of the 2015 ASEE Annual Conference*.

AUTHOR INFORMATION

Jennifer Felder Marley Assistant Professor, Valparaiso University, jennifer.marley@valpo.edu.

Douglas Tougaw Professor, Valparaiso University, doug.tougaw@valpo.edu.