AC 2011-1001: CONCEPTUAL UNDERSTANDING OF ELECTRICAL PHENOMENA: PATTERNS OF ERROR IN SENIOR ELECTRICAL ENGINEERING STUDENTS' PROBLEM SOLVING

Mark T Carnes, Purdue University, West Lafayette

Mark Carnes is a licensed Professional Engineer (PE) and is currently a doctoral student and a future faculty fellow in the School of Engineering Education at Purdue University. Before coming to Purdue, he spent over 30 years as an electronics designer of control and power conversion circuits. He received an MS from the University of Michigan (1982) and a BS from the University of Notre Dame (1975), both in Electrical Engineering.

Ruth A. Streveler, Purdue University, West Lafayette

Ruth A. Streveler is an Assistant Professor in the School of Engineering Education at Purdue University. Before coming to Purdue she spent 12 years at Colorado School of Mines, where she was the founding Director of the Center for Engineering Education. Dr. Streveler earned a BA in Biology from Indiana University-Bloomington, MS in Zoology from the Ohio State University, and Ph.D in Educational Psychology from the University of Hawaii at Manoa. Her primary research interests are investigating students' understanding of difficult concepts in engineering science and helping engineering faculty conduct rigorous research in engineering education.

Conceptual Understanding of Electrical Phenomena: Patterns of Error in Senior Electrical Engineering Students' Problem Solving

Every field of study has a set of domain-specific concepts that anyone who desires to work in that field must know and understand. Most students who pursue university degrees in engineering presume that their education is designed to provide them with this knowledge. But does it? In electrical engineering, the most fundamental concepts are rooted in physics, specifically the behavior of electrons and their motion. The two terms most frequently used to describe these phenomena are *current*, which means a net movement of charged particles through a surface, and *voltage*, which refers to a difference in charge between two points that will cause the charged particles to move. Understanding these concepts is foundational to understanding all electrical phenomena.

There is a widespread and pervasive belief that the proper way to teach basic electronics is by equation manipulation, essentially mathematical modeling. Many beginning circuits textbooks, e.g. Smith[1], DeCarlo[2], etc., will give a brief treatment of the physics of charge and electrical forces, but for the most part they assume that students have a thorough understanding of the electrical phenomena involved from their physics course that they have taken the previous semester, or more often, are taking concurrently with their first circuits course. Researchers in physics education, Edward Redish[3] and Carl Wieman[4], have found that, for the overwhelming majority of students, this is not the case. After a brief mention of moving charge, the average first circuits course moves quickly to mathematical equations. This can have the effect of conveying the idea that the equations actually drive electrical phenomena. When asked *why* something happens, beginning students (and sometimes even more advanced students) will answer, "Because the equations say so." One of the participants in this study, a senior electrical engineering (EE) major at a small western research university was asked how she understood electrical phenomena. She responded:

> "For me it's more the math. Just because I relate really well to the algebra side of it where, okay here's the formula, manipulate it this way and this is what my outcome's going to be. But actually conceptualizing things and being able to explain like the picture of it and say, 'This is what electricity is.' It's one of those things where I kind of wish I would understand that side better".

The interviews for this study were conducted as part of a larger study of student understanding of difficult concepts in both mechanical and electrical engineering. Reporting on the results of the interviews with mechanical engineering students, Douglas et al.[5] identified misconceptions that students have about force and how these misconceptions were represented in their solutions of a statics problem. Their data suggested that mechanical engineering students do not understand accurately the concept of force. In addition, the findings indicated that these students actually viewed force as a material object.

The results of the interviews with electrical engineering students in this study indicate that a similar situation may exist among EE students. Many do not have a clear conception of the principles of electrical phenomena. To address this, it will be necessary to determine what kinds

of mental representations students have of the fundamental electrical concepts of voltage and current.

Research Questions

1. What do student models of the electrical phenomena of voltage and current look like?
2. How do these models compare to the correct representations?

Methodology

Theoretical Framework

The theoretical framework for this study will be Mental Models. This concept is often traced back to psychologist and philosopher Kenneth Craik's 1943 treatise, *The Nature of Explanation*[6]. Using Craik's hypothesis as a starting point, Johnson-Laird developed it into a more complete theory of cognition. He makes the assertion that "All our knowledge of the world depends on mental models"[7]. Craik began by observing that to explain any phenomenon, the principle of causality is essential. He stated that, "One of the most fundamental properties of thought is its power of predicting events"[6]. In any domain of knowledge, to understand an observed phenomenon means to know what causes it to occur, and consequently to be able to predict what will happen when the necessary conditions occur again. He draws on the example of engineering thought and practice to develop his ideas on the use of models. He explains that when engineers design a bridge they don't just build it in a haphazard way and then run a train across it to see if it collapses. They build scale models to help them work out the structure and the measurements needed for it to have sufficient strength. These models may be physical, but they can also be constructed in the mind, where the calculations are carried out based on the mental representation of the desired structure. "Human thought has a definite function; it provides a convenient small-scale model of a process so that we can, for instance, design a bridge in our minds and know that it will bear a train passing over it" [6]. Just as engineers may build a scale model of a bridge to be able to test its properties more easily and then make predictions concerning the necessary properties of the full-size bridge, so the mind performs a similar function by constructing a mental model that is used to process information and make predictions. From this foundation, Johnson-Laird went on to construct his theory of cognition. He states: "The theory of mental models is intended to explain the higher processes of cognition and, in particular, comprehension and inference"[7]. From this point, Johnson-Laird explores the theory in terms of a concept:

> "The concept is that of *recursive* mental processes that enable human beings to understand discourse, to form mental models of the real and the imaginary, and to reason by manipulating such models." [7]

In later work, Johnson-Laird was able to validate his theories by experimentation. He showed that "The mental model theory assumes that logically-untrained reasoners are not equipped with formal rules of inference, but rather rely on their ability to understand premises. They build mental models of the relevant states of affairs based on this understanding and on general knowledge. They can formulate a conclusion that is true in these models[8]." He verified that when models are incomplete or limited, they can lead to fallacious conclusions.

Gentner and Stevens[9] assert that applications to technical fields, in which individual concepts can be more easily separated and characterized, provide a useful platform for the study of the process of mental modeling. Using the example of electricity and comparing different models, they were able to establish that mental models are usually generative, that is, they are used as an aid in analyzing and finding solutions to problems.

Schoenfeld[10] demonstrates how it is possible by observation and interviews to discern the mental models of the teaching process used by classroom teachers, leading to a greater understanding of their decision making processes. He then went on to demonstrate that this could be done in other domains as well.

In this study, students solved problems involving voltage and current in a modified "think-aloud" format, which included interaction with the interviewers to elicit their thinking. By observing their solutions and methodology, it was then possible to reason back to what their mental models would need to look like to produce the results that they exhibited. The problems used were selected by the use of a Delphi process[11]. This methodology was chosen to gather expert opinions about which concepts in electric circuits were both important and difficult to learn. The problems were then developed to elicit deeper student thinking than would be possible with a multiple choice format.

Jonassen et al.[12] examined the attributes of "real-world" problems in engineering that make them complex and ill-structured. However, when discussing ill-structured problems, the assumption is often made that students are already adept at solving well-structured problems. The successful problem solver needs to be able to deal with both. The problems used in this study are of the well-structured variety, that is, there is a correct answer and a limited number of correct solution paths. This was done to elicit patterns of student thinking concerning the fundamental concepts involved.

Participants

Participants were 6 electrical engineering seniors (4 men, 2 women) at a small, public engineering school. Students were self-selected after receiving an e-mail invitation. They were paid $20 for their participation.

Procedures

A team of two interviewers, a psychologist and a math teacher, interviewed the student participants individually for one hour. They asked the students to solve and explain four questions involving electric circuits. To cover a broader range of concepts, all participants were not asked the same questions, but were presented with a set of four questions randomly drawn from a pool of 12 questions developed by a content expert (a professor of EE at the same University) based on the results of the Delphi study. The professor provided the interviewers with the correct solutions to the problems and briefed them on the concepts involved. The interviewers themselves, however, were not content experts, which proved to be a limitation. When the student's approach did not conform to their briefing, they were not able to tell whether the students were going in a correct or incorrect direction.

Data analysis

The actual data analysis was done by a content expert (the first author) who was not involved in the problem generation or the data collection. As a Professional Engineer and a practicing electronics designer for over 30 years, he was able to compare the students' uses of the concepts of voltage and current to the correct concepts. He first coded the interviews for instances where the students either explained their own conceptions of voltage and current, or applied them directly to a problem, with a particular interest in the modes of expression they used to describe their understanding. Would they use direct descriptions of the physical phenomena, mathematical representations, or analogies? After sorting the data, he conducted a Qualitative Item Analysis (QIA) to look for common themes.

Results and Analysis

To understand students' conceptions and misconceptions of electricity, it is necessary to know something about the correct conceptions.

Electrons

All electrical phenomena are based on the movement and behavior of electrons. To transfer energy or information, this movement must be controlled. The study of electrical engineering is all about learning to control this movement for useful purposes. To be able to study this field, some basic terminology is needed. First, according to classical atomic theory, the electron is a charged particle that is more or less free to move under the influence of external forces. The movement of these charges is called *current* and is a measure of the net total charge that passes through a reference plane per unit time. *Voltage* refers to a difference in the state of charge between two points that can result in the movement of charges as they "seek" equilibrium. This is sometimes referred to as a potential difference. The idea being that a static voltage in electricity is analogous to potential energy in Newtonian physics. To transfer energy electrically, sustained current flow is necessary. There are two primary ways that current is used to transfer energy: direct current (dc) and alternating current (ac).

Direct current

When the energy source being used has a fixed voltage, as in a storage battery, and a circuit is connected to it, the electrons flow continuously in one direction. This is referred to as direct current, or dc. The voltage of the source is often referred to by the abbreviation Vdc, which means volts of direct current. This terminology has some unfortunate consequences. Though it is intended to refer to the voltage only, the use of both the words "voltage" and "current" in the same term causes many people to confuse the terms and use them interchangeably.

Alternating current

When the energy source is a rotating machine, such as a generator, a wind turbine, or a large power plant, the electrons move back and forth at a fixed frequency with no net motion in either

direction. The voltage also oscillates at the same frequency. The purpose of one of the problems in this study was to see if students understood this. The problem was stated as follows:

> "Estimate the number of electrons the power company delivers annually to the homes of a typical city of 50,000."

Six students attempted this problem. Every one of them began with the assumption that the answer would be a huge number, and so they began setting up equations and assuming values to calculate it. The point of the question was to see if the students, knowing that utility power is always alternating current, would recognize that this means that the electrons everywhere move back and forth, so that the net number of electrons delivered will always be zero. Only one of the students, Gerry, recognized this, and then only after he had spent some time working the equations. He came to a sudden realization:

> "If I were to actually look at this, I'd probably say zero, it actually delivers the electricity. What it actually does isn't actually push electrons through. It actually jumps from one to the other. And, the more active they are they're going to move about within the wire, but they're not actually going to travel down the wire, I don't believe. So the current is actually going to basically be jumping from electron to electron. This, I believe, is my understanding, but not totally sure on that."

He came to the right answer, but for the wrong reason. He recognized that the electrons were not traveling down the wire, but envisioned another kind of 'substance' called electricity that did move down the wire by jumping from electron to electron. All of these responses indicate that the students were using a mental model based on a water flow type analogy, in which they see current or electricity as a substance that, like water, travels from one end of a pipe to the other.

Voltage

As explained above, voltage refers to a potential difference between two points. Several students (Donald, Kevin, Keith) would apply it this way sometimes, but then a few minutes later would use it as if it were the property of a point. It is necessary to be careful about this, because even experts will speak of the voltage at a point, but when they do that, they are talking about the potential difference between that point and a known reference, usually called ground. In the following question about diodes, it was clear that Kevin and Keith were not doing it correctly. The problem is:

> **Question 9:** What is the conduction state of each ideal diode? What is the output voltage V_{OUT} if the diodes are ideal? Defend your answer (i.e. explain your reasoning.)

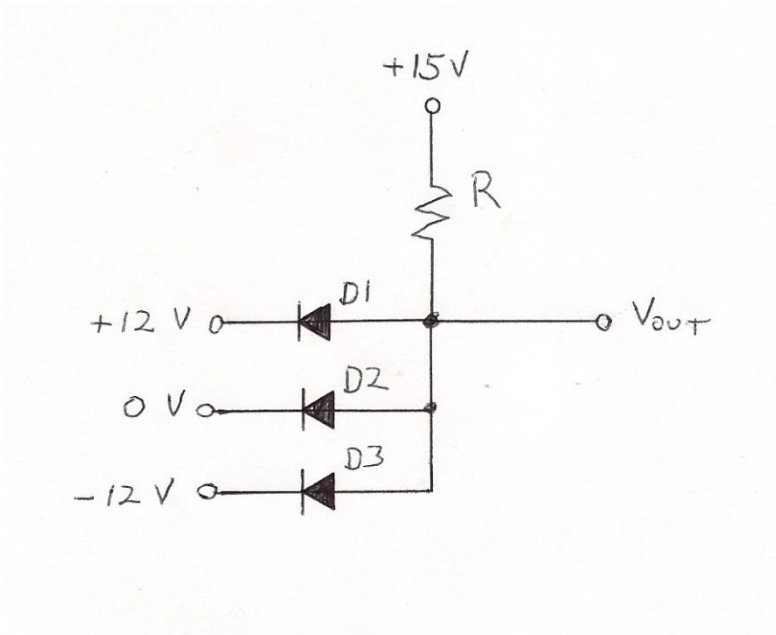

The correct answer is that only diode D3 is on, while both D1 and D2 are off, and Vout = -12 V. In this arrangement, V_{OUT} is clamped to -12V, so there is a voltage difference of 27 volts across resistor R. Both Kevin and Keith, the only students who worked this problem, knew that a positive voltage on a diode turns it on, but they did not understand that that means *across* the diode from right to left. They saw +12V on one side of D1, +15 V somewhere on the other side, and assumed (incorrectly) that since the numbers were both positive, then D1 must be on. They had no idea what to do with the -12V or the 0V. Keith tried to apply the model for the on-state and then calculate currents, but to no avail, since that model does not give any information to determine whether it is on or off. They tried to compute currents through R, but that was fruitless as well.

Current

The students did better in explaining current. Most were aware that current is a flow of electrons and that current is conserved. This could be understood because one of the principle equations that all students are taught is Kirchhoff's Current Law, which states that the sum of all currents entering a point must be zero. They also recognized that current in an inductor tries to remain constant even when a switch is opened causing an arc, which is essentially current continuing to flow through the air.

Mathematics

The one overwhelming theme that was seen in all of the student participants was that their first response to every problem was to look for equations to apply and numbers to plug in. As Keith said:

> "In general, try Kirchhoff Laws and see what happens. I could read the problems and be like, 'Oh, I know I need to use this equation,' and just plug it in."

In every problem she faced, Pat tried to find a way that V=IR could be applied, whether it made sense or not. In analyzing a power line, Pat seemed unaware that the ac voltage is the one thing that is relatively fixed on a high voltage line while the current varies with load. To use V=IR, she assumed that current (I) was fixed and that the resistance of the line was known, and then tried to calculate the presumed variable V. In looking at a circuit involving summing of ac currents, rather than doing the phasor sum of the given currents, which is the standard approach, Keith tried to calculate the equivalent impedance of the network, which was not needed, since the currents were already given.

Conclusion

In all, 6 participants worked 4 problems each, for a total of 24 solutions. Of these, only 6 were worked correctly, 4 had a few correct elements, and the other 14 were not even close. The predominant model used by all students was to try to apply any equation they could think of to see what would happen. Conceptual models of the processes involved were extremely muddled, and often contradictory. If these were beginning students, an instructor could use the information gained from this study to begin to teach these students fundamental concepts and build a more coherent structure, as proposed by Vosniadou [13]. Using their own mental models, however disorganized and incomplete, as starting points, a more accurate mental model could be created. But these students were seniors, ready to graduate with EE degrees. Everyone involved should find this alarming. They have been taught a set of equations, how to take tests and pass courses, but their ability to function in the real world of engineering practice is highly questionable. The question that remains is whether this result is indicative of a more widespread problem. Using this as a pilot study, additional studies of the mental models and conceptual understanding of students at other institutions need to be done. Assessing the extent of the problem is a necessary step to developing ways to address it through improved instructional methodologies.

Bibliography

1. Smith RJ. *Circuits, Devices, and Systems*. 2nd ed. New York: Wiley; 1971.

2. DeCarlo RA. *Linear Circuit Analysis: Time Domain, Phasor, and LaPlace Transform Approaches*. Oxford, UK: Oxford University Press; 2009.

3. Redish EF. Discipline-Based Education and Education Research: The Case of Physics. *Journal of Applied Developmental Psychology.* 2000;21(1):85-96.

4. Wieman C, Perkins KK, Adams WK. Oersted Medal Lecture 2007: Interactive Simulations for Teaching Physics: What Works, What Doesn't, and Why. *American Journal of Physics.* 2008;76(4&5).

5. Douglas TC, Santiago-Roman A, Streveler RA. Does Conceptual Understanding Matter: Patterns Of Error In Senior Engineering Students Problem-Solving In Statics? *2010 ASEE Annual Conference and Exposition.* Vol Louisville, KY2010.

6. Craik K. *The Nature of Explanation*. Cambridge, U.K.: Cambridge University Press; 1943.

7. Johnson-Laird PN. *Mental Models: Towards a Cognitive Science of Language, Inference, and Consciousness*. Cambridge, MA: Harvard University Press; 1983.

8. Johnson-Laird PN, Girotto V, Legrenzi P. Mental Models: A Gentle Guide for Outsiders. 1998; http://www.si.umich.edu/ICOS/gentleintro.html.

9. Gentner D, Stevens A, eds. *Mental Models*. Hillsdale. NJ: Lawrence Erlbaum Associates; 1983.

10. Schoenfeld AH. *How We Think: A Theory of Goal Oriented Decision Making and its Educational Applications*. New York: Routledge; 2011.
11. Streveler RA, Geist M, Ammerman R, et al. Identifying and Investigating Difficult Concepts in Engineering Mechanics and Electric Circuits. *ASEE Annual Conference and Exposition.* Vol 2006.
12. Jonassen DD. Everyday problem solving in engineering: Lessons for engineering educators. *Journal of Engineering Education.* 2006;95(2):139-151.
13. Vosniadou S, Ioannides C, Dimitrakopoulou A, Papademetriou E. *Designing Learning Environments to Promote Conceptual Change in Science*2009.