Design and Analyze the Frame for the Global Sustainable Urban Transport (SUT) Vehicle

Dr. Mohammad Kamal Hossain, Tuskegee University

Mohammad Kamal Hossain is an Assistant Professor in the Department of Mechanical Engineering at Tuskegee University. He received his Ph.D., M.S., and B. Sc. in Mechanical Engineering from the University of Nevada, Las Vegas (USA), Tuskegee University (USA), and Bangladesh University of Engineering and Technology (Bangladesh), respectively. His specialization is in the areas of materials and design. Before coming to Tuskegee University (TU), he worked as a Visiting Assistant Professor and Research Faculty in the Department of Mechanical Engineering at the University of Nevada, Las Vegas (UNLV). He served as a Technical Advisor for the senior design project at UNLV. He teaches CAD, capstone design, and solid mechanics courses at the undergraduate and graduate level. He has been involved with the capstone design program at TU since his tenure in 2008. His course design projects are sponsored by industry and government laboratory which include GM, JOHN DEERE, AFRL, and NUCOR. He is the Lead-Faculty Contact for the Advancement of Collaborative Engineering Education (PACE) at TU.

Design and Analyze the Frame for the Global Sustainable Urban Transport (SUT) Vehicle

Abstract

In this paper we describe the activities of our university undergraduate students on the 2011-2012 Sustainable Urban Transport (SUT) Global Project whose goal is to develop an affordable and sustainable global vehicle. This project is sponsored by the Partners for the Advancement of Collaborative Engineering Education (PACE) and General Motors (GM). The project is designed to address the need for the Next Generation of SUTs as a part of our Capstone Design Project. The competition unites schools from around the world in a team effort to accomplish this goal. Our global PACE team is comprised of teams from Inha University (South Korea), Monash University (Australia), RWTH Aachen University (Germany), Northwestern University (USA), Hongik University (South Korea), and our university (USA). Our team's projected city of interest is Seoul, South Korea. As of 2010, Seoul's population was 10,464,051. Our students focused on the frame analysis and material selection.

The objective of our frame analysis was to optimize the critical loading situation and reduce the vehicle weight by selecting the right material for this vehicle. Hence, light weight makes the SUT more economically competitive. It was recognized that the current state of material development presented the opportunity to apply materials outside of the industry standards used today. To accomplish our objective, we designed the frame based on the selected dimensions by the global team using Unigraphics NX 7.5 provided by the PACE. We then conducted a finite element analysis (FEA) on the frame using Nastran solver embedded in the NX 7.5 software. An emphasis was placed on the resulting structural stress, strain, and displacement of each FEA. The material options established for our analyses were steel, aluminum and steel combination, and carbon fiber reinforced polymer composite (CFRP).

The results of our analyses were consistent with the results of our PACE teammates. Carbon fiber reinforced polymer composite was proven to be the ideal material for the SUT. Its maximum structural displacement, stress, and strain were 590.67 mm, 6.57×10^4 MPa, and 0.828, respectively. The overall mass of the CFRP frame was 1335.73 kg, nearly 35% of the steel frame's mass.

Introduction

The global population is steadily increasing. A direct effect of this consistent growth is migration. Urbanization refers to the migration of an increasing population to large cities or suburbs. Throughout history, urbanization has proven to be extremely beneficial. However, its negative results are prevalent as well. With the immense growth of urban environments and its subsequent effects, there is a dire need for forms of transportation powered by sustainable energy. The Sustainable Urban Transport (SUT) is such a vehicle.

There are multiple SUTs in existence today that match our project design criteria. The MyCar was originally a manufacturing collaboration between EU Auto Technology and Hong Kong Polytechnic University. It was available in Hong Kong, Britain, Austria, and France. In 2010, EU Auto Technology was acquired by GreenTech Automotive. As of today, GTA plans to begin manufacturing the MyCar in its Mississippi plant soon. Current specifications are unknown. However before the acquisition, The Mycar had a maximum speed of 35 to 40 mph, a charge time of 5 to 8 hours, and a driving range of 40 to 68 miles. Length, width, and height were 2.6 m, 1.4 m, and 1.4 m, respectively. The price was $10,000.00[1].

The Smart ED is an electric car manufactured by Smart GmbH. It has a maximum speed of 62 mph, recharge time of 8 hours, driving range of 84 miles, and is powered by a 16.5 kW*h lithium-ion battery. The dimensions of the Smart ED are 2694.94 mm (length), 1559.56 mm (width), and 1541.78 mm (height), respectively. The Smart ED trial program began in January 2011 with a leasing price of $599.00. A near production version was unveiled in late 2011. The field trials took place in France, Germany, and the United States [2].

The Tesla Roadster is an electric vehicle manufactured by Tesla Motors in the United States. It is available until early 2012 in the US, parts of Europe, North America, and Asia. The Tesla Roadster maximum speed is an impressive 125 mph and an equally impressive driving range of 245 miles. The dimensions of the Tesla Roadster are 3939.54 mm (length), 1851.66 mm (width), and 1126.49 mm (height), respectively. The Tesla Roadster is powered by custom microprocessor-controlled ion lithium battery. The current cost is $109,000.00[3].

The target city for our project is Seoul, South Korea. Seoul is not only the capital of South Korea, but its largest city as well. As of 2010, the population was 10,464,051. Seoul is a prime example of the urbanization taking place in today's world. Seoul and the surrounding area make up the Seoul National Capital Area. This megacity is the second largest metropolitan area in the world. With over 24.5 million inhabitants, it is nearly half of South Korea's population[4]. The reasons that we have targeted Seoul in Korea among Asia as target city are that Seoul has feature of megacity and Seoul will have charging infra systems. Charging infra is a core thing in wide use of electric cars. Today, driving road of low-speed electric cars is permitted in Seoul. On the other hand, General Motors' annual PACE competition is a global project designed to address the need for the Next Generation of Sustainable Urban Transportation (SUT). Hence, our team's objective was to solve the Seoul's urbanization problem partially developing an affordable and sustainable global vehicle. The main criteria of the competition is that the vehicle be fueled by a sustainable energy, occupy a substantially smaller amount of space compared to the midsized car driven today, and be capable of transporting two passengers. The competition unites schools from around the world in a team effort to accomplish this goal. Our global PACE team is comprised of teams from Inha University (South Korea), Monash University (Australia), RWTH Aachen University (Germany), Northwestern University (USA), Hongik University (South Korea), and our university (USA). More specifically, this article will focus on the frame analysis and material selection.

Design Characteristics

Our global PACE team determined the dimensions of our global Sustainable Urban Transport (SUT) vehicle. One of the major project criteria was an emphasis on compactness. Therefore, it was important that our SUT be smaller yet practical. The height, length, and width of our SUT were 1109.78 mm, 1959.76 mm, and 1270 mm, respectively. Overall dimensions are shown in Figures 1 through 4, respectively.

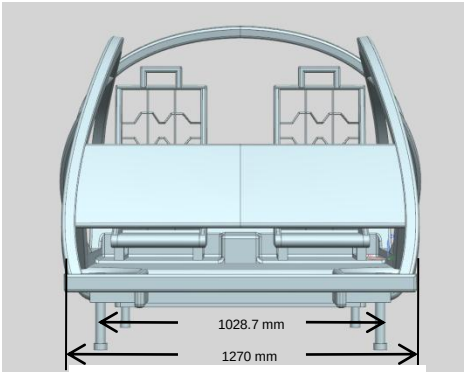

Figure 1: Frame Dimensions

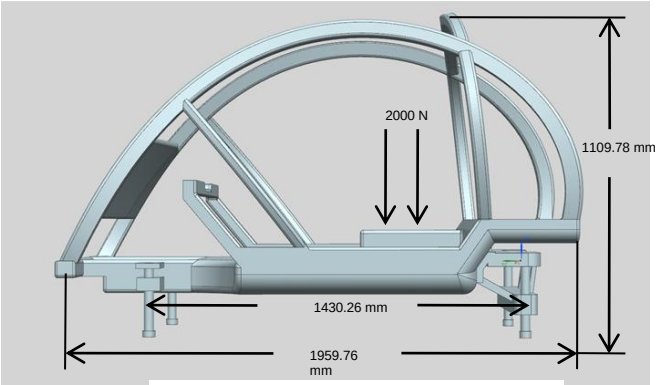

Figure 2: Frame Dimensions

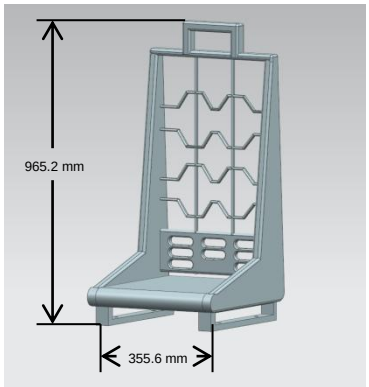

Figure 3: Seat Dimensions

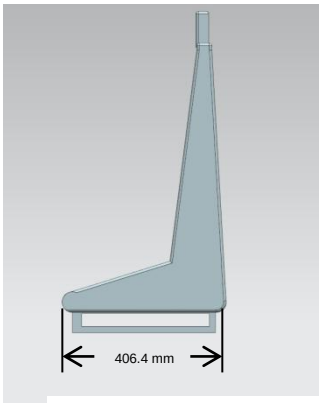

Figure 4: Seat Dimensions

Frame Analysis

An important detail of the frame design was the application of constraints and contact surfaces. Assembly constraints were applied between the driver seat and frame and passenger seat and frame. Similarly, contact surfaces (surface to surface contact and surface to surface gluing) were applied between the driver seat and frame, and passenger seat and frame. A general distance tolerance of 0.0254 mm was allowed.

For the finite element analysis (FEA), the Unigraphics NX 7.5 Nastran solver was used. 3D Tetrahedral Meshing was applied to the entire frame. The total element count was 369,125 and the total node count was 100,462. Fixed constraints were applied to all the wheels. A force of 2000 N was applied to the frame, accounting for the load applied by SUT passengers.

For the frame analysis, our objective was to determine a suitable material for the frame of our SUT. It was recognized that the current state of material development presented the opportunity to apply materials outside of the industry standards used today. To accomplish our objective, the team conducted multiple finite element analyses (FEA) using various materials for the framework. An emphasis was placed on the resulting stress, strain, and structural displacement of each FEA. The material options established for our analyses were steel, aluminum and steel combination, and carbon fiber reinforced polymer composite (CFRP).

Today, steel is the conventional material used in the manufacturing of automotive framework. For proper comparison, our team found it necessary to establish a frame analysis utilizing this industry standard. Aluminum and CFRP are relatively new materials in respects to framework manufacturing. Various mechanical properties of each material used in each FEA are presented in Table 1[5].

Table 1: Mechanical Properties

Mechanical Properties					
Material	**Density (kg/m^3)**	**Shear Modulus (Gpa)**	**Young's Modulus (GPa)**	**Poisson's Ratio**	**Yield Strength (MPa)**
Steel	7.8×10^3	77-85	205-217	0.285-0.295	250
Aluminum	2.5×10^3	25-31	68-82	0.32-0.36	275
CFRP	1.55×10^3	28-60	69-150	0.305-0.307	500

Our subteam also calculated the bending stiffness and torsional stiffness of each frame alternative. The bending stiffness relates the applied moment to the resulting displacement. The torsional stiffness refers to the frame's resistance to an applied torque. Both characteristics offer insight into the frame's structural rigidity. The bending stiffness and torsional stiffness equations are shown below respectively[6]. The range of the bending resonant frequency (f_n) varies from 22 to 25 Hz for passengers' comfort. This frequency range is relatively free from major exciting forces and responders. This is also in a range in which humans are less sensitive to vibration[6]. Our bending and torsional stiffness are calculated based on the resonant frequency as 25 Hz.

Equation 1: Bending Stiffness

$$\omega_n = \frac{22.4}{\sqrt{48}} \left(\frac{l}{L}\right)^{\frac{3}{2}} \sqrt{\frac{K}{M}}$$

where:

l = Wheel base

K = Required bending stiffness of the body

L = Overall length

ω_n = Desired bending resonant frequency for the frame

M = Rigidly mounted mass

Equation 2: Torsional Stiffness

$$K = \frac{(2\omega h)^2}{\left[\frac{ab}{(Gt)}\right]_{SURFACE\ 1} + \left[\frac{ab}{(Gt)}\right]_{SURFACE\ 2} + \left[\frac{ab}{(Gt)}\right]_{SURFACE\ 3} + \left[\frac{ab}{(Gt)}\right]_{SURFACE\ 4} + \left[\frac{ab}{(Gt)}\right]_{SURFACE\ 5} + \left[\frac{ab}{(Gt)}\right]_{SURFACE\ 6}}$$

Where:

K = Torsional Stiffness

w = Width

G = Shear modulus

h = Height

a, b = Dimensions

t = Thickness

Results & Discussion

For our steel frame, the bending stiffness ranged from about 9060-13590 N/mm and its torsional stiffness was 1.617 x 10^7 N*mm. For our aluminum-steel frame, the bending stiffness ranged from 4770-7156 N/mm and its torsional stiffness was 1.616 x 10^7 N*mm. For our CFRP frame, the bending stiffness ranged from 3245-4866 N/mm and its torsional stiffness was 1.619 x 10^7 N*mm. The team conducted multiple finite element analyses (FEA) using selected materials for the framework. The structural displacement, stress, and strain contour plots of each FEA were developed. The resulting structural displacement, stress, and strain contour plots of CFRP frame are shown in Figures 5-6, 7-8, and 9-10, respectively, for representation.

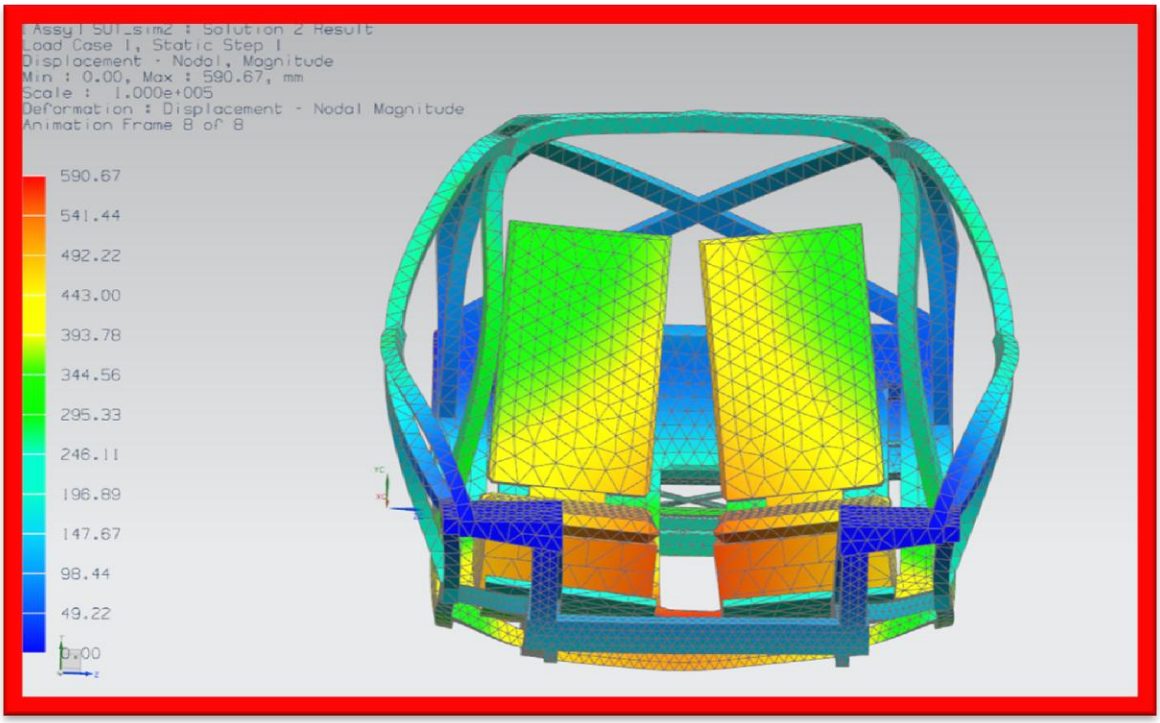

Figure 5: CFRP Displacement Contour

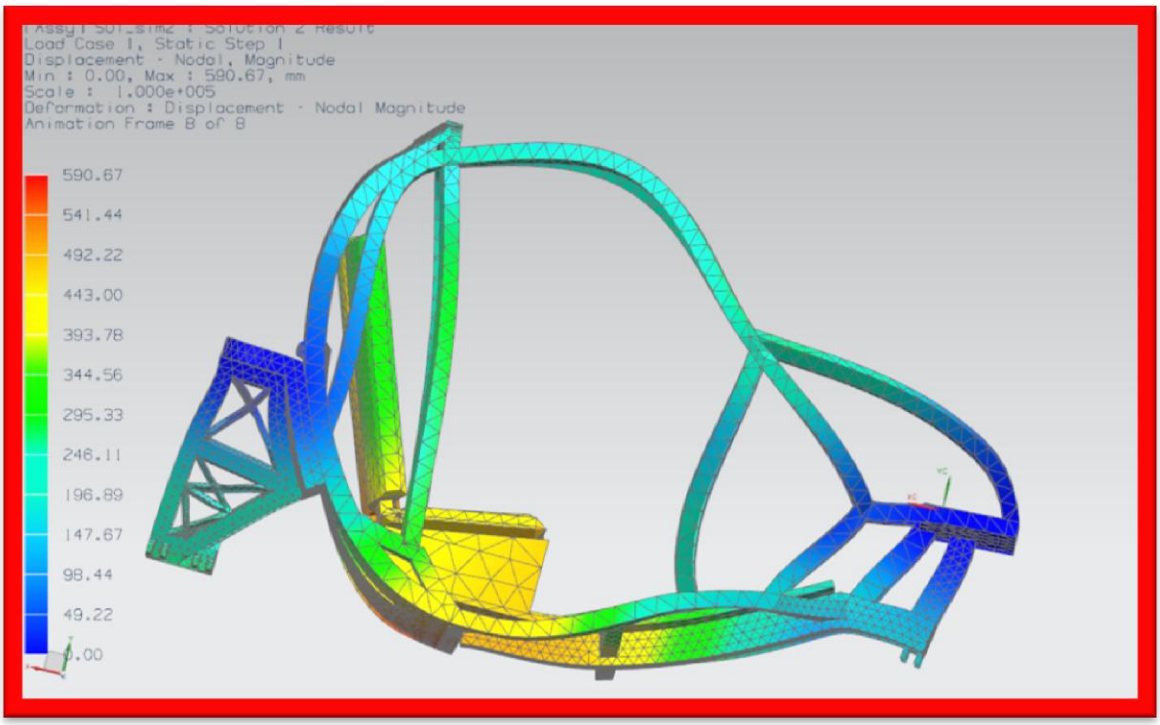

Figure 6: CFRP Displacement Contour

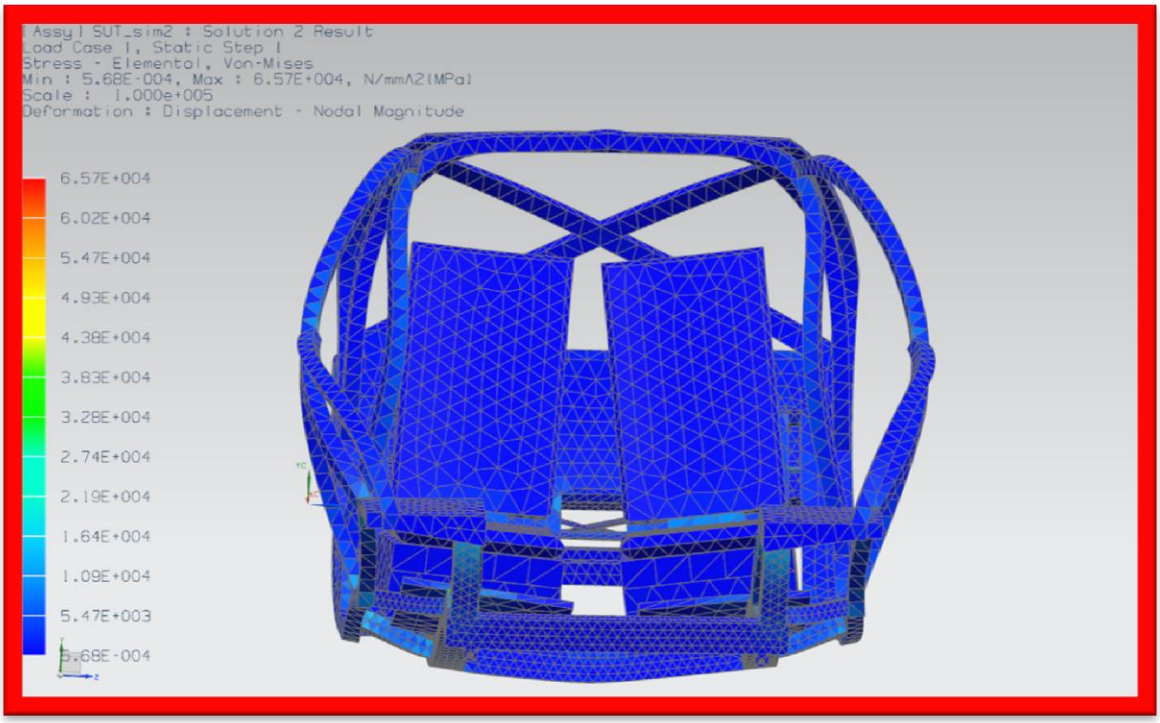

Figure 7: CFRP Stress Contour

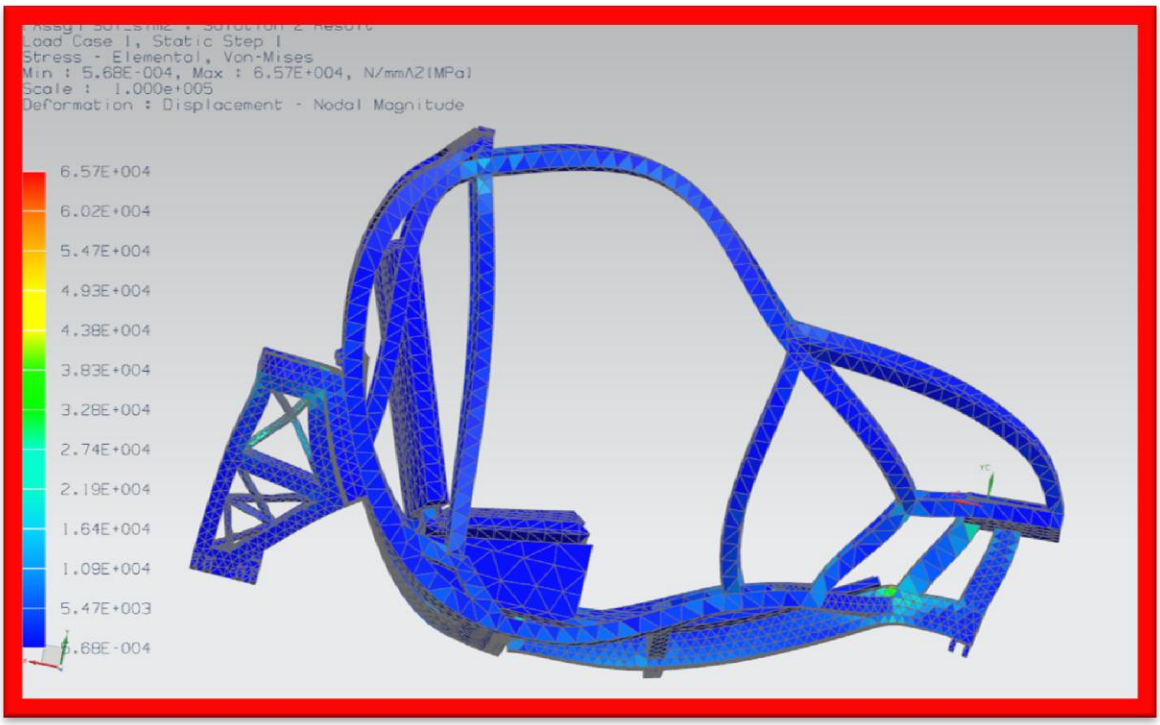

Figure 8: CFRP Stress Contour

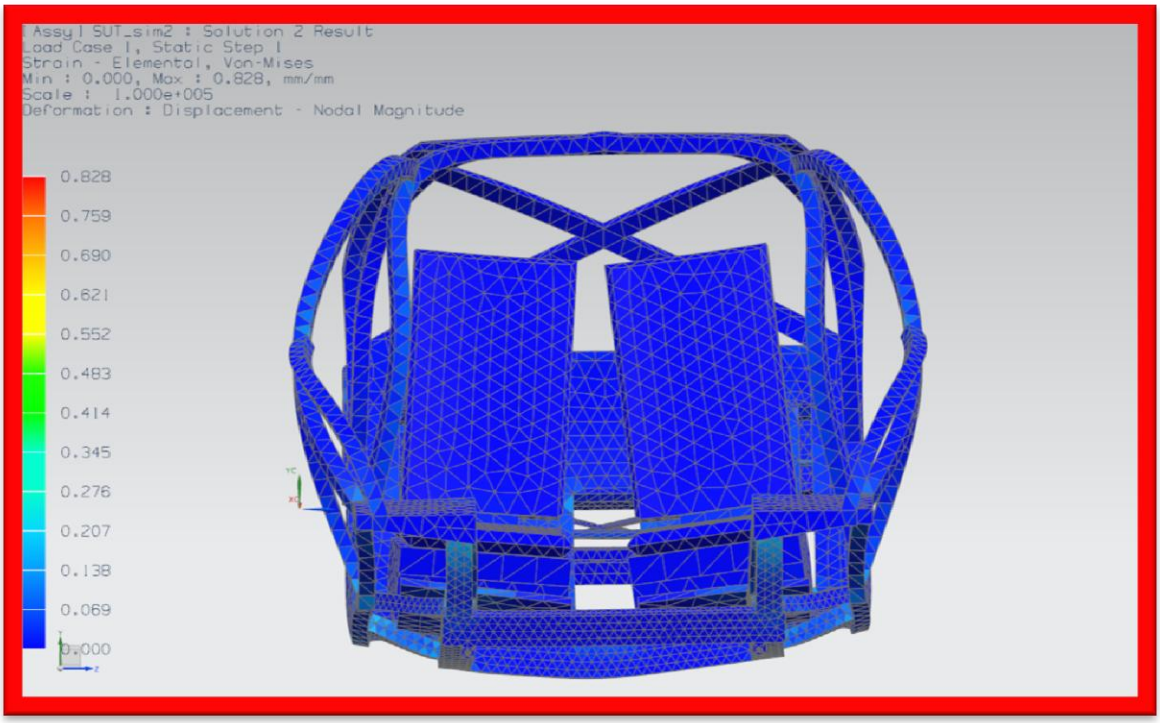

Figure 9: CFRP Strain Contour

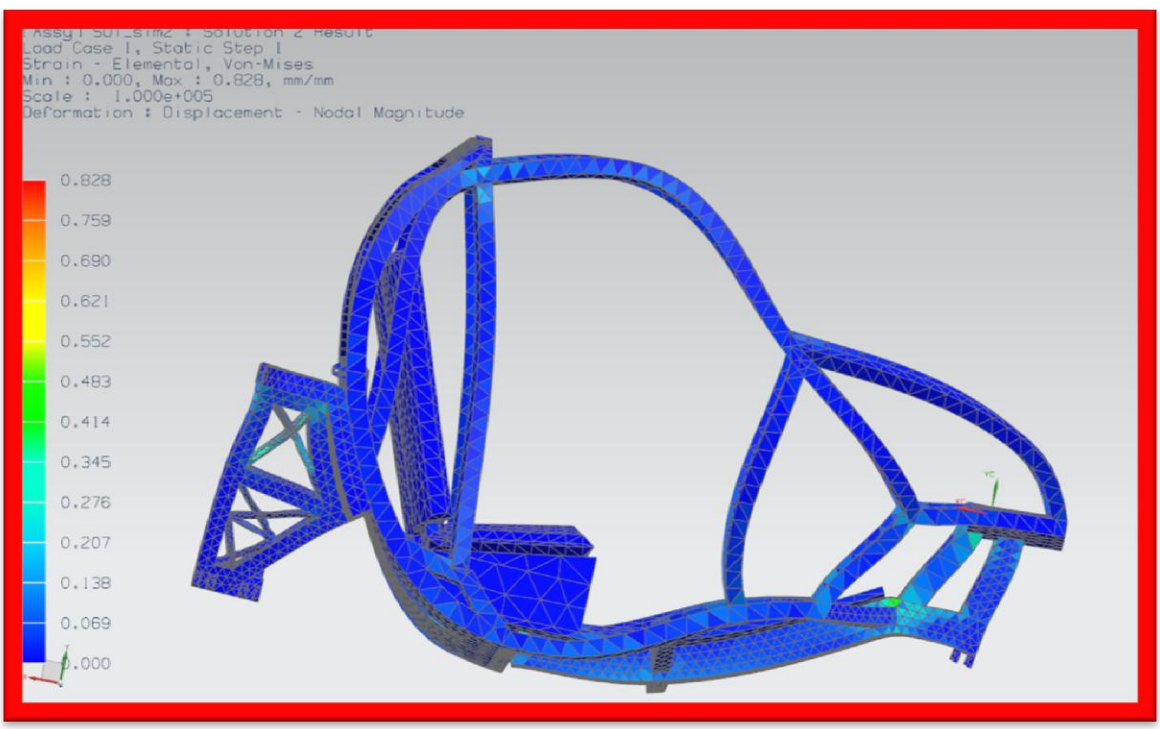

Figure 10: CFRP Strain Contour

The results of the finite element analyses, bending stiffness calculations, and torsional stiffness calculations are reflected in Table 2. The results of the steel frame analysis were as expected. It exhibited the least amount of displacement and the highest resistance to deformation. However, its mass was the greatest. The mass of the aluminum-steel frame was substantially lighter. However, its resistance to deformation yielded in comparison to steel.

The CFRP frame exhibited both a comparable displacement and a comparable resistance to deformation. It also exhibited a moderate strength. More importantly, the CFRP frame had the lowest mass, nearly 35 % of the steel frame's mass. The reduction in mass translates to an increase in efficiency and a decrease in manufacturing costs. Overall, CFRP proved to be the ideal material for our sustainable urban transport.

Table 2: FEA Results and Stiffness of the Frame

Material	Mass (kg)	Displacement (mm)	Stress (MPa)	Strain	Bending Stiffness (N/mm)	Torsional Stiffness (N*mm)
Steel	3730.22	229.42	7.20×10^4	0.299	9060-13590	1.617×10^7
Aluminum/Steel	1964.35	518.26	5.23×10^4	0.596	4770-7156	1.616×10^7
CFRP	1335.73	590.67	6.57×10^4	0.828	3245-4866	1.619×10^7

Carbon fiber reinforced polymer composite was determined to be the most suitable material for the frame of our SUT vehicle. However, there were two major critical loading areas. Expectedly, one area was the base of the SUT frame. The greatest amount of displacement is attributed to the base due to the load of the driver and passenger. The second area is the joint between the frame and the front axles.

Conclusion

It is important to keep in mind that these analyses were conducted on the frame and the frame alone. Significant deformation was always expected. Our purpose was to determine which of our proposed materials would be most efficient. An increase in the cross sectional area of our frame base has proven, through further analysis, to reduce the deformation. However, that increase directly translated to an increase in the overall mass. It is believed that the suspension system will vastly alleviate the displacement observed in our analysis. Finally, we were able to make the necessary dimension reductions in our frame design, identify critical areas within the frame, and select/confirm a material for the Sustainable Urban Transport (SUT) vehicle.

Acknowledgement

The authors like to acknowledge the PACE program and GM for sponsoring this project. The authors also like to thank the faculty members and students involved in this project from domestic and international universities including Northwestern University (USA), Hongik University (South Korea), Inha University (South Korea), Monash University (Australia), and RWTH Aachen University (Germany).

References

1. GreenTech Automotive Inc., "MyCar NEV". [Online]. Available: http://www.wmgta.com/en/products/mycar-nev.
2. Smart USA, "Electric Drive". [Online]. Available: http://www.smartusa.com/models/electric-drive/overview.aspx.
3. Tesla, "Tesla Motors" [Online]. Available: https://www.teslamotors.com.
4. AsiaRooms.com, "South Korea". [Online]. Available: http://www.asiarooms.com/en/travel-guide/south-korea/south-korea-overview/
5. CES EduPack (Version 6.2.0) [Software]. Cambridge, United Kingdom; Granta Design Limited.
6. Malen, Donald E. Fundamentals of Automobile Body Structure Design. Warrendale, PA: SAE International