120th ASEE Annual Conference & Exposition
FRANKLY, WE DO GIVE A D*MN
June 23-26, 2013

Paper ID #6095

Development of a Senior Mechatronics Course for Mechanical Engineering Student

Prof. John G. Cherng P.E., University of Michigan-Dearborn

Received M.S and Ph. D. degrees from Mehanical and Aerospace Engineering, University of Tennessee, Knoxviell, Tennessee in 1975 and 1978 repectively. Teaching undergraduate and graduate courses in heat transfer, instrumentation, mechatronics, turbomachinery, vibrations and acoustics. Research interests inculde turbomachinery, vibration and acoustics, and nano materials.

Dr. Ben Q. Li, University of Michigan, Dearborn
Dr. Narasimhamurthi Natarajan, University of Michigan, Dearborn

Development of a Mechatronics Course for Senior Mechanical Engineering Students

Abstract

This paper presents the development of a mechanical engineering senior elective course titled: "ME472 Principles and Applications of Mechatronics System Design". The main objective of this course is to teach students the principles and applications of mechatronic systems. Ten hands-on laboratory projects and two course projects were integrated into the course to enhance a student's comprehension of mechatronics concepts. Students were required to complete each course project independently. The outcome of the course was assessed by homework assignments, quizzes, examinations, lab project reports, and course projects. In addition, two class surveys and one course evaluation were conducted during the course. The following paper discusses in detail the content and structure of the course. Student feedback and lessons learned were incorporated as well. It was found that the majority of students were able to perform successfully in all lab projects and exams/quizzes. Both microprocessor and MechLab projects were rated the most favorable projects by the students. In addition, for the subsequent senior design project course, students were able to integrate microprocessors and microcontrollers in their mechanical system design which implies a great potential for the student to implement this technology in their future career.

Introduction

Since Yasakawa Electric Co. released its trademark on the term "mechatronics" in 1982, the technology of mechatronics has evolved significantly into various technologies; this originally anonymous word has become a pervasive word in both education and industry. The growth of mechatronic applications has increased exponentially in the past two decades, especially after the technology of microprocessors/microcontrollers were embedded into system designs. For example, there are more than twenty microprocessors used in various components of a standard automobile.

More than a decade ago, the Department of Mechanical Engineering at the University of Michigan-Dearborn, Dearborn, Michigan received numerous requests from members of the Industrial Advisor Committee and senior executives of the local automotive industry to develop a mechatronics course in order to meet the demands of the current engineering environment. A graduate-level mechatronics course was developed in 2001. It was jointly taught by one faculty professor from the Mechanical Engineering Department and one faculty professor from the Electrical and Computer Science Engineering Department. Unfortunately, student feedback was not favorable and the course was never taught again.

Since 2006, several visionary curriculum renovations were implemented; the creation of an undergraduate mechatronics course was one of the curriculum renovation plans. The course

content for ME472 Principles and Applications of Mechatronic Systems Designs was approved by the college curriculum committee in April 2012 and was offered in the fall semester of 2012.

Undergraduate mechatronics courses have been implemented in many universities with various course structures. For example, Dr. Vladimir Vantsevich, Professor and Director of Mechatronic Systems Engineering Program at Lawrence Technological University, teaches an undergraduate mechatronics course [1] which replaces the conventional engineering controls course. Professors Brent Gillespie and Shorya Awtar in the Mechanical Engineering Department at the University of Michigan, Ann Arbor, Michigan taught the graduate level Mechatronic Systems Design (ME552) course in 2007 [2]. During the same time period, they also added thematic sections on mechatronics to the undergraduate course ME450 (Design and Manufacturing III), the department's capstone design class. Furthermore, Awtar has revised the junior level ME350 (Design and Manufacturing II) to include a mechatronics portion, which covers sensors and actuators in addition to traditional machine elements. University of Detroit Mercy offers a three-credit hours undergraduate mechatronics course; ENGR 4790 Mechatronics: Modeling and Simulation which applies modeling and simulation tools for analysis, synthesis, and design of mechatronic systems [3]. After reviewing the contents of an engineering control course and a mechatronic system design course, it was concluded that a separate mechatronics system design course was most suitable for our students to gain sufficient knowledge in the field. Therefore, the objectives of ME472 were threefold:

1. Prepare mechanical engineering undergraduates with the knowledge of and skills in mechatronic principles and applications, especially in the area of integrating microprocessors and microcontrollers.

2. Provide the student with hands-on experience in mechatronic systems including microprocessor, integrated mechatronic systems, and virtual mechatronic system simulations.

3. Challenge the student's innovation abilities by requiring independent course projects on the application of mechatronic principles.

Course Logistics

ME472 is a four credit course consisting of a three-credit hours lecture and a one-credit hour lab. The class lectures are delivered twice per week with 80 minutes for each period. The laboratory session meets once a week for a three hour period. Students are grouped with two to three people per group, in the lab session. A formal lab report is required for each lab project.

There are no textbooks assigned for the course, but two references, "Mechatronics-A Foundation Course" by Clarence W. De. Silva [4] and "Principles and Applications of Mechatronics" by Godfrey C. Onwub [5] are strongly recommended to the student. Many students showed interest in purchasing one or both books. Class notes developed primarily from these two textbooks and other resources were converted into PDF format files. The PDF class notes, assignments and assignment solutions, plus other course related material were posted in the college website of

Virtual Learning Tools (VLT). VLT is in-house developed course management software. Students are able to sign-in to the course site with his/her unique user name and a key code.

The subjects covered in the course lecture are: (1)Mechatronic Engineering, (2) Basic Elements and Components of Mechatronic Systems, (3) Microcomputers and Microcontrollers, (4)Mechanical Actuator Systems, (5) Electrical Actuator Systems, (6) Interfacing Microcontrollers with Actuators, and (7) Digital Transducers and Modulators.

The completed lab projects covered three categories: (1) microprocessor controlled robots using a Microchip PIC16F690 microcontroller, (2) integrated material handling systems using Festo MechLab equipment, and (3) virtual fluid flow system simulations using LMS AMSim Imagine Lab. All lab projects were conducted on a weekly basis. Lab reports were due at the beginning of the next lab. In addition, two course projects were assigned for the course.

At the beginning of the semester, the homework was assigned but not collected and not graded. The solution was posted on the VLT one week after the assignment given in class. However, after the first quiz, it was decided to collect and grade the homework. The students preferred the new arrangement. There were a total of two exams, one midterm and one final, plus 11 quizzes. A straight grade scale was used, where an A+ was given for a total score of 95% and above, an A for 90% and above, and so on.

Lecture Contents

To coherently present each topic, each subject was presented as a chapter of work which included objectives, applications, and conclusions. Each chapter followed the order of presentation in the two books mentioned in the previous section plus other references. The outline of each chapter is listed below:

1. **Mechatronic Engineering**

    - Objectives
    - Mechatronic System
    - Modeling and Design in Mechatronics
    - Mechatronic Design Concept
    - Evolution of Mechatronics,
      Application Areas,
    - Study of Mechatronics and Conclusions

2. **Basic Elements and Components of Mechatronic Systems:**

    - Objectives
    - Mechanical Elements, Fluid Elements, and Thermal Elements
    - Mechanical Components
    - Passive Electrical Elements and Materials.

3. **Microcomputers and Microcontrollers:**

- Objectives
- Microcontrollers
- PIC16F690 microcontroller
- Programming a PIC using Mikro-C language
- Interfacing to the PIC and UART Communication

4. **Mechanical Actuator System:**

- Objectives
- Hydraulic and Pneumatic systems
- Mechanical Elements
- Kinematic Chains
- Cam Mechanism
- Gears and Ratchet Mechanism
- Flexible Mechanical Elements
- Clutches and Brakes.

5. **Electrical Actuator System**

- Objectives
- Moving-Iron Transducers
- Solenoids, and Relays
- Electrical Motors
- Direct Current Motors
- Control of D.C. Motors, Servo Motor, and Stepper Motor
- Motor Selection.

6. **Interfacing Microcontrollers with Actuators:**

- Objectives
- Interfacing with General Purpose Three-State Transistors
- Interfacing Relay
- Interfacing Solenoids
- Interfacing Stepper Motor
- Interfacing Permanent Magnet Motors
- Interfacing with Sensors
- Interfacing with DAC(Digital-Analog-Converter)
- Interfacing Power Supplies, and Compatibility at an Interface.

7. **Digital Transducers and Modulators**

- Objectives
- Definition of Digital Transducers
- Advantages of Digital Transducers

- Shaft Encoders
- Incremental Optical Encoder
- Absolute Optical Encoders
- Encoder Errors
- Miscellaneous Digital Transducers
- Image Sensor
- Modulators and Demodulators.

When available, additional illustrations and videos were added to the lecture presentation, such as the examples shown in Figure 1 which shows (a) the actual assembly parts of a harmonic drive and (b) a video clip that demonstrated the operation of the drive. The students really enjoyed the video clip demonstration.

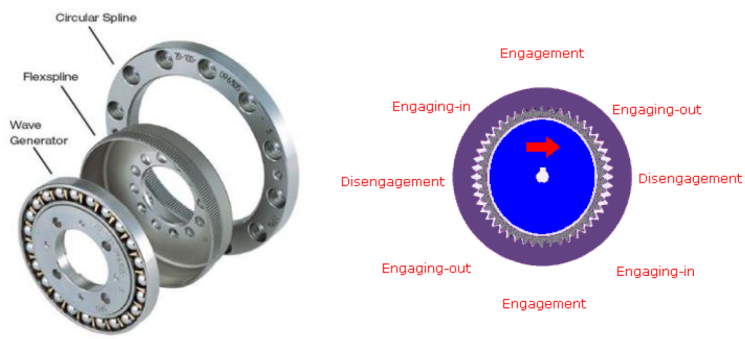

(a) Actual Parts (b) Operation Video

Figure 1. Actual Parts and Operation Video of a Harmonic Drive

Laboratory Projects

The hands-on laboratory sessions consisted of two different types: weekly lab projects and course projects. There were ten weekly laboratory projects that consisted of two portions. The first portion covered the description of the project including objective(s), required parts and part descriptions, a wiring diagram, a sample program, and step-by-step tutorial instructions attached in appendices. The second portion required the student to apply the knowledge learned from the first portion to solve a specified problem.

Regular Laboratory Projects

Dr. Nattu Natarajan was the key person in developing these projects and spent much time in every step of designing and implementing. The robot lab projects were developed by taking a building-block approach. The semester starts off manipulating a simple breadboard circuit and ends with a complex robot system. Each new project is built upon the basis of the previous project. More parts/sensors are added to the breadboard as the system gets more complex.

The ten offered lab projects were (1) Introduction to microcontroller architecture and LED display system, (2) Robot motion control and LED display system, (3) Robot speed and

directional control system, (4) Obstacle detection control system, (5) Light sensing and triggering line follower system, (6) Material handling control system, (7) Conveyor control system, (8) Material stacking control system, (9) High Pressure Fuel Injection with Heat Exchange System, and (10) Pneumatic Pressure Regulator System.

Lab Project 1: Introduction to Microcontroller Architecture and LED Display System

The objective of this project was to introduce the basic operation principles of a microcontroller, i.e. PIC16F690. Since the majority of the mechanical engineering students have never touched a microprocessor or wiring a circuit on a breadboard prior to this course, this lab was designed for them to get familiar with wiring the breadboard with a PIC and programming a mikro-C compiler to turn LEDs and LED bar segments on and off. Only two diodes and two LED segments were used in the first portion of the Lab project. The students were asked to add more diodes and more LED bar segments to the circuit and to update the program to create different time intervals of "on" and "off". Figure 2 shows the wiring diagram and final completed project.

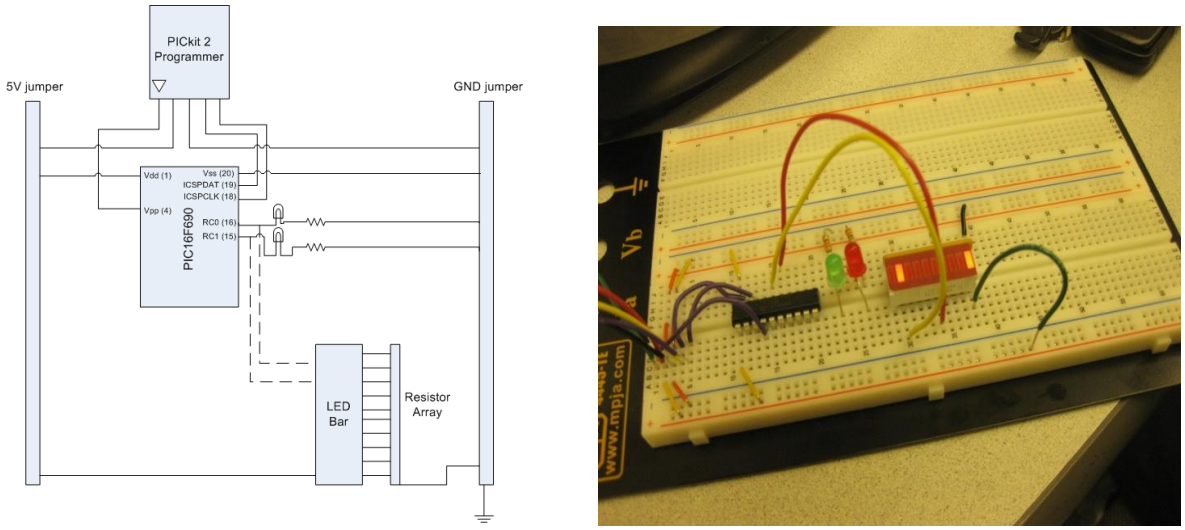

(a) Wiring Diagram (b) Completed Circuit

Figure 2. Microcontroller Wiring Diagram and LED Display System

Step-by-step instructions with photos were provided in the appendix of the lab manual to guide the student on how to wire the PIC on the breadboard. Figure 3 shows two wiring steps, from E4 to Pin 19-RA0 and from E5 to Pin 18-RA1.

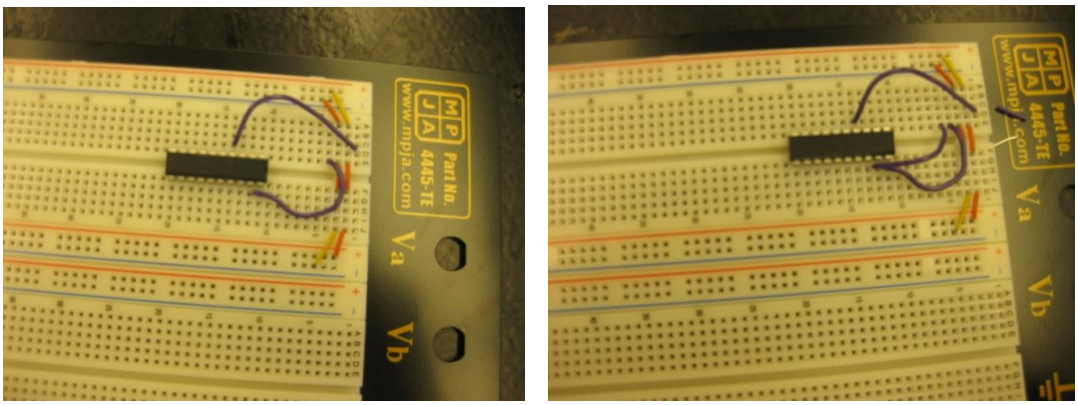

(a) E4 to Pin 19-RA0 (b) E5 to Pin 18-RA1

Figure 3. Step-by-step Instruction Photos on PIC–Breadboard Wiring

In additional to step-by-step wiring instructions, a sample mikroC program listing is also provided in the manual. Although the students have C-programming experience, they have very limited knowledge on 'bit setting' in the program. The mikroC complier was developed by MikroElektronika Company, who allows a free download of their complier for various PIC usages. Figure 4 presents the listing of a sample code using mikroC, which sets two LED diodes to blink every 250 ms alternatively.

```
void main() {
      ANSEL=ANSELH=0; // Analog select = 0 (No analog inputs)
      TRISC = 0; // Makes all of PORTC outputs
      while(1>0) { // Infinite loop
                  RC0_bit = 1;
                  RC1_bit = 0;
                  delay_ms(250); // 250 msec delay

                  RC0_bit = 0;
                  RC1_bit = 1;
                  delay_ms(250); // 250 msec delay
      }

}
```

Figure 4. A Sample mikroC Code.

Lab Project 2: Robot Motion Control and LED Display System

The objective of this lab project was to provide the student with hands-on experience in building a simple robot system by using an H-bridge motor driver chip. From the breadboard in Lab 1, the student added an H-bridge driver, a voltage regular, a capacitor, a battery holder, and headers to the breadboard. Then, they mounted the breadboard on a piece of wood panel and added two motors, two wheels, and a ball caster to build the chassis of the robot. Figure 5 shows the wiring diagram of the system and the completed robot.

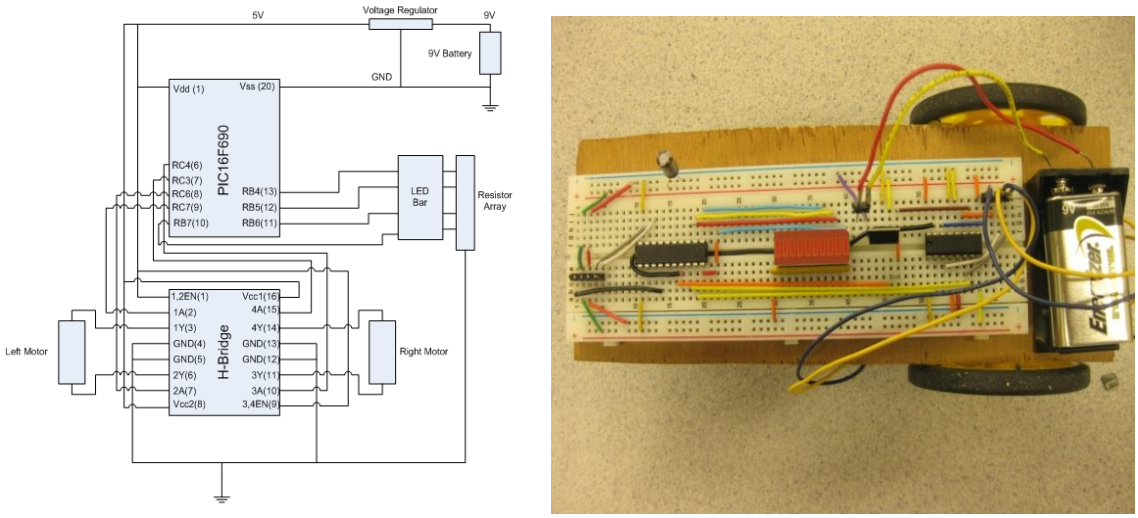

(a)`Wiring Diagram (b) Completed Robot System

Figure 5. Wiring Diagram and Robot of Lab Project 2.

The operations of this robot were as follows: move forward for 5 seconds, make a brief stop, and then go reverse for another 5 seconds. For the exercise, the student needed to re-program the robot to go forward for 2 seconds, turn right for 2 seconds; turns left for 2 seconds, and then finally go forward for 6 seconds. Therefore, after finishing this lab project, the student learned how to control the robot's movements, which were expanded on in the following lab projects.

Lab Project 3: Robot Speed and Directional Control System

The objectives of this lab project were to (1) configure the PIC to receive external inputs, (2) understand how a potentiometer works and how it will be used to control Pulse Width Modulation (PWM) with regards to the speed of the motors, and (3) control the speed and direction of the robot movements. Figure 6 shows the push button and the potentiometer used for sending input signals to the PIC and controlling speed. Four push buttons were used – one for forward, one for reverse, one for right turn and one for left turn. All parts were installed in two different breadboards and connected with the main chassis with 3 to 4 foot wires.

(a) Push Button Switch (b) Potentiomer

Figure 6. Push Button Switch and Potentiomer used in Lab 3.

Figure 7 presents the wiring diagram and the final robot system. The LED bar has been removed from the circuit and the battery is monuted to the bottom of the panel. To limit the current when a button is pressed, 1 kΩ resistors are added to the switches. When no buttons are pushed, the robot will stand still. When the forward button is pushed, the robot moves forward and if the reverse button is pushed, the robot moves backward, the same process occurs for right and left turns respectively. When the robot is in motion, the speed of the robot can be adjusted by turning the knob of the potentiometer.

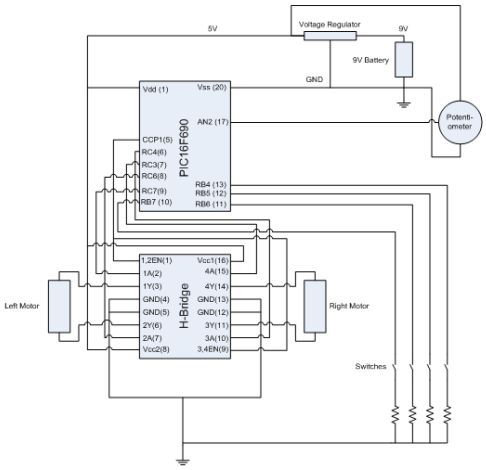

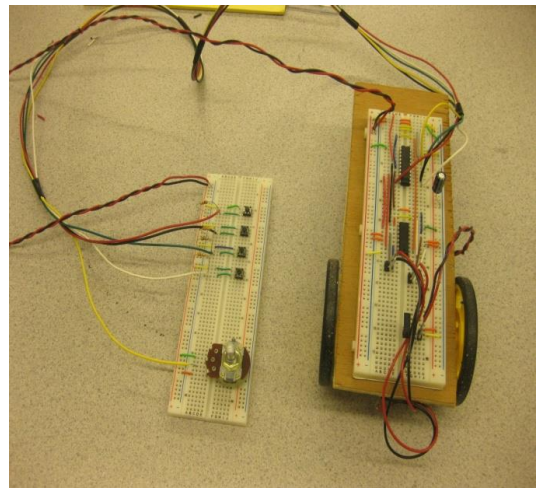

(a) Wiring Diagram (b) Completed System

Figure 7 Wiring Diagram and Completed System of Lab 3.

Lab Project 4: Obstacle Detection Control System

The objectives of this Lab project were to understand how the external trigger works and experience the different methods of obstacle avoidance by using an optical distance sensor and a limit switch as shown in Figure 8.

(a) Optical Distance Sensor (b) Limit Switch

Figure 8. Optical Distance Sensor and Limit Switch Used for Obstacle Avoidance

The push button switch and potentiometer of the previous lab project were replaced by an optical distance sensor and a limit switch. Both sensors were mounted to the base breadboard with the optical distance sensor at the front and the limit switch on the right side. The range of the optical sensor is 2 to 10 cm. The operation of the robot was programmed to move backwards and then turn to its left when it encounters an obstacle in front of the robot. It will also turn to the left when the right limit sensor is in contact with an obstacle. Figure 9 presents the wiring diagram and the final completed system.

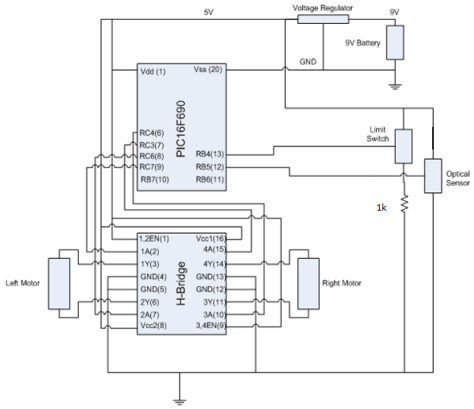

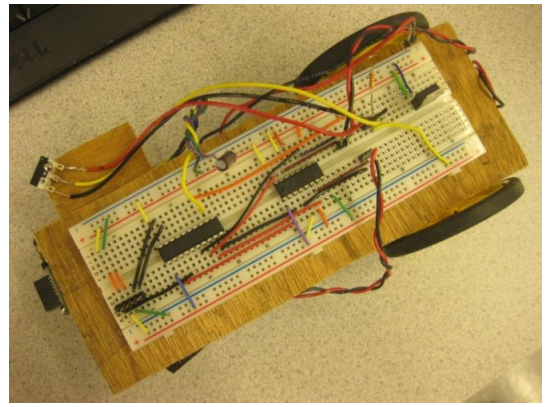

(a) Wiring Diagram (b) Completed System

Figure 9. Wiring Diagram and Completed System of Lab 4

Lab Project 5: Light Sensing and Triggering Line Follower System

The objectives of this lab project were to understand how the trigger switch operates with optical sensor and build an autonomous line-following robot. By using three optical sensors and one trigger switch, the robot automatically followed a black track on a white background. Figure 10 presents the wiring diagram and final completed system.

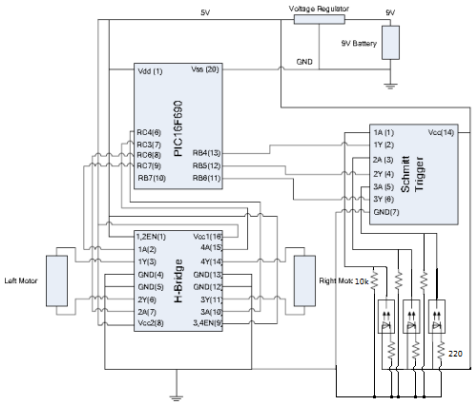

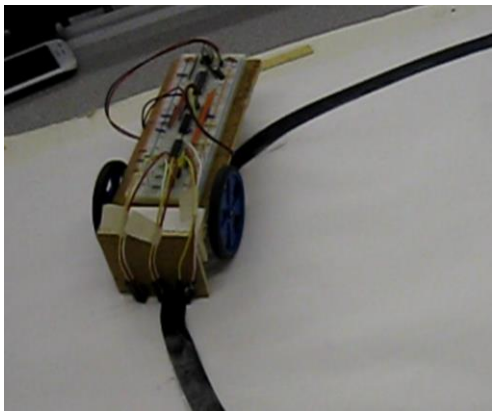

(a) Wiring Diagram (b) Completed System

Figure 10. Wiring Diagram and Completed System of Lab Project 5.

The following three lab projects were developed by using mechatronic training equipment, namely “MechLab” from Festo Corporation. The MechLab system consists of full size hardware parts and software called “FluidSim”. The interface was established by using a device called “East Port Programmer” which communicates between the computer and the hardware parts through a multi-pin plug-in distributer. Figure 11 shows the Easy Port Programmer and the distributor.

(a) Easy Port Programmer

(b) Multi-Pin Distributer

Figure 11. Photos of Easy Port Programmer and Multi-Pin Distributor

Each mechanical and electrical part has an icon associated with them. Figure 12 shows the pictures of (a) a configurable way valve with its symbol and (b) a magnetic proximity switch with its symbol icon.

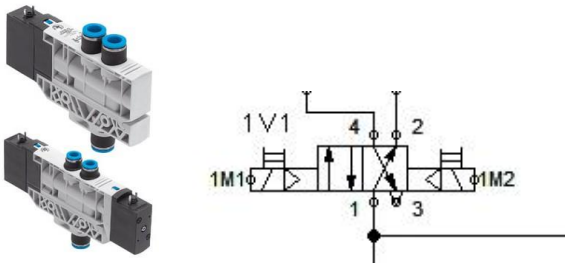

(a) Configurable Way Valve

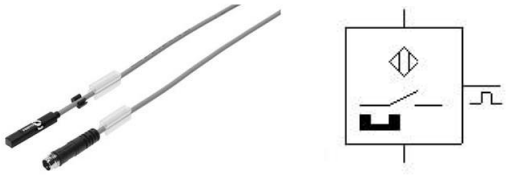

(b) Magnetic Proximity Switch

Figure 12. Examples of Mechanical and Electrical Parts and Symbols

The complete MechLab system provides basic parts for three mechatronic systems: (1) Material handling system (Lab Project 6), (2) Conveyor control system (Lab Project 7), and (3) material stocking system (Lab Project 8). All parts were inter-changeable between stations.

Lab Project 6: Material Handling Control System

The objective of this project was to develop a material handling system that would grip a small metal cylinder with two arms and place it in an adjacent location. This system requires pneumatic devices which were operated by both compressed air and electrical sensors/switches. The student first built the system by selecting proper icon symbols from the library of FluidSim, and then integrated them according to the given wiring diagram as shown in Figure 13. The rectangular block in the middle of the circuit is the modular which contains all control logics.

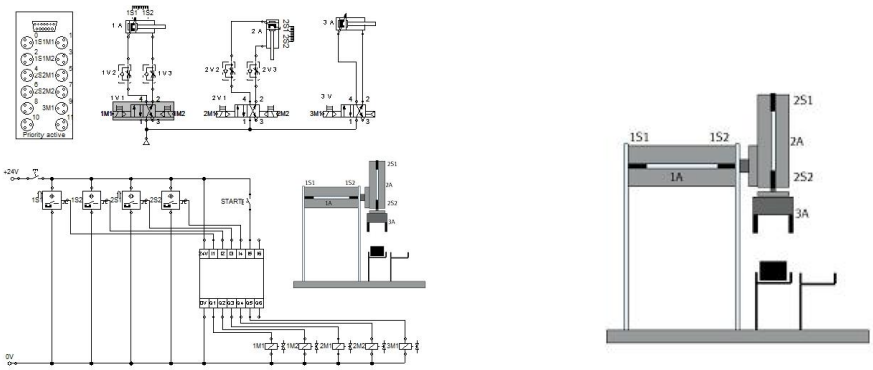

(a) Wiring Diagram (b) Station Schematic

Figure 13. Material Handling System.

After labeling all parts, the multi-pin plug distributer was updated with proper labeling for each pin. The control signal will come from the software and pass through the distributor and to all associated parts to make them operate accordingly. The student was advised to test the system in FluidSim before wiring and connecting FluidSim to the hardware. The final completed station is shown in Figure 14.

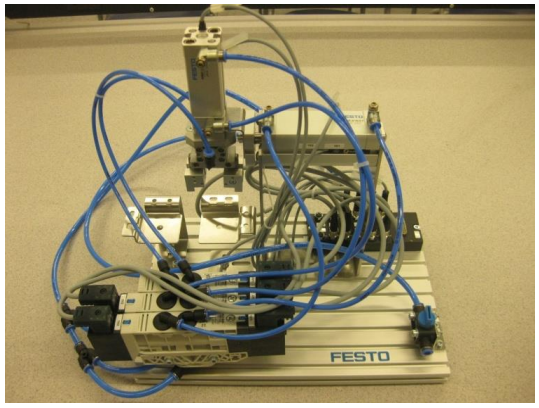

Figure 14. Completed Material Handling System

As shown in Figure 13b and 14, there are two platforms under the gripper arms. The operation specification was to pick up the cylinder from the platform underneath the arms and place the cylinder to the platform to its left. The exercise of this lab project was to relocate the sensor so the gripper arm will travel further down to pick up two cylinders at the same time and place them to the left platform.

Lab Project 7: Conveyor Control System

The objective of this lab project was to design a conveyor system that can perform pass/fail inspection using a solenoid valve and an inductive proximity switch. There are two types of objects, one is a shiny cylinder and one is a black cylinder. The original control logic was to pass the black cylinder and reject the shinning cylinder. The exercise of this project was to reverse the pass/fail criterion of the original control logic. The wiring diagram and completed system are shown in Figures 15 and 16 respectively.

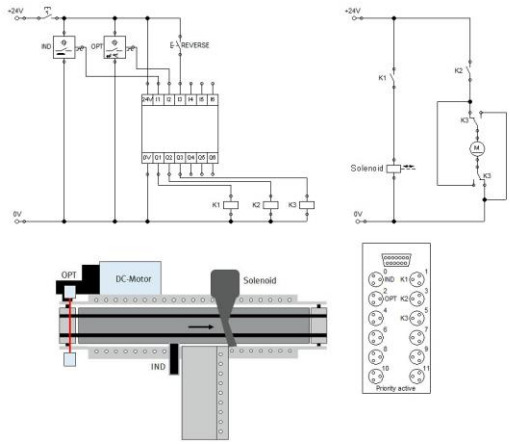

Figure 15. Wiring Diagram of Conveyor Control System.

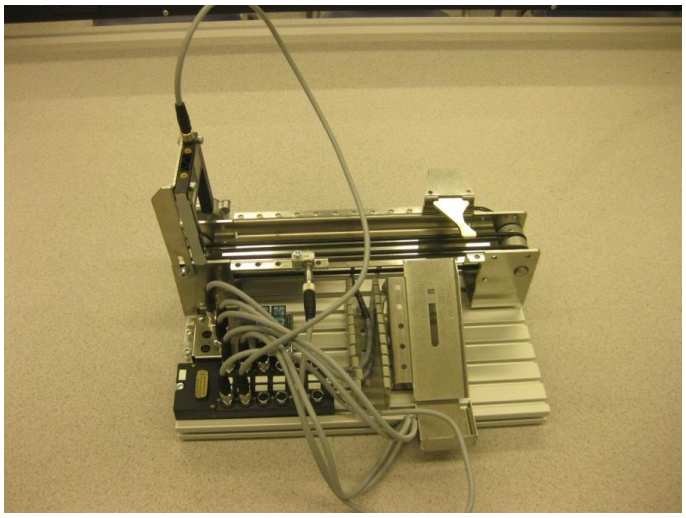

Figure 16. Completed Conveyor Control System

Lab Project 8: Material Stacking Control System

The objective of this lab project was to build a material stacking system that can join two cylinders together by compression. One female cylinder is first placed at the platform. As the male cylinder drops from the feeding channel, a pushing rod will come down from the top to press two cylinders into a single part. The exercise of this lab project was to add a second cylinder valve to push the final joined cylinder out of the platform by building a second chassis next to the first one. Figures 17 and 18 present the wiring diagram and the completed material stacking system respectively.

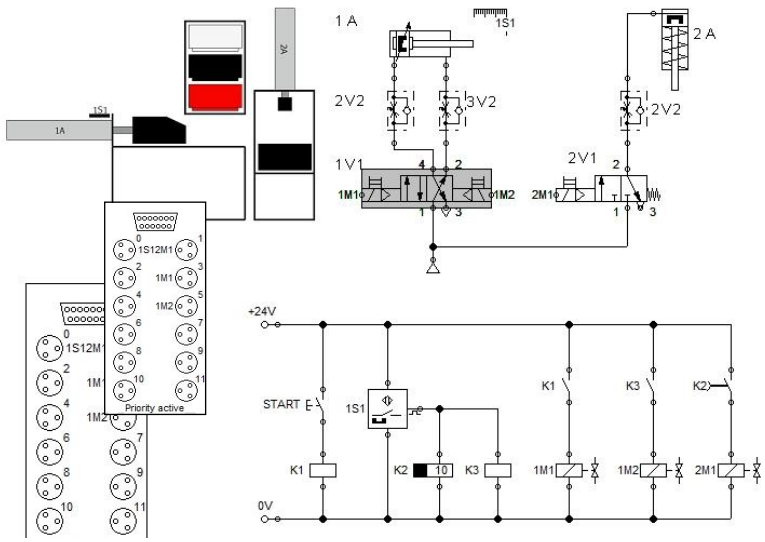

Figure 17. Wiring Diagram of Material Stacking System

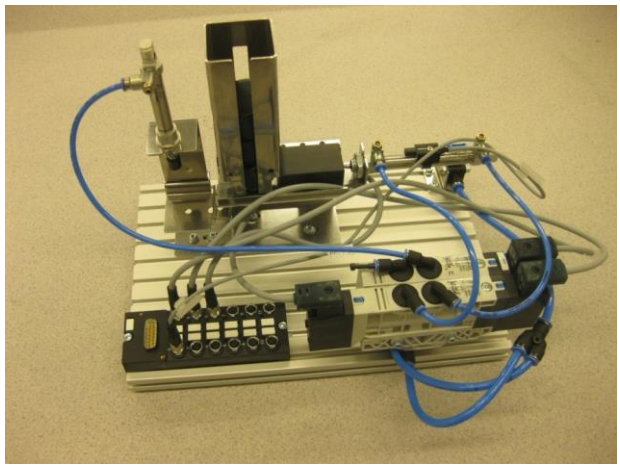

Figure 18. Completed Material Stacking System

Lab Projects 9 and 10 are virtual system simulation projects using the widely used mechatronic system simulation and optimization software “AMSim –Imagine Lab” developed by LSM

International Inc. (Siemens). Many local manufacturers and suppliers adopt this software in their daily design practices. This software are also used in several ME courses.

Lab Project 9: High Pressure Fuel Injection with Heat Exchange System –

The objective of this lab project was to simulate a high pressure fuel injector with consideration of heat exchange with its environment. The system consists of three major components: plunger, needle valve and control valve. They are constructed by mechanical and pneumatic elements such as mass-spring/piston-spring elements, tank, valves, hydraulic chamber, orifice, heat conduction element, and control signal. The complete system model is shown in Figure 19.

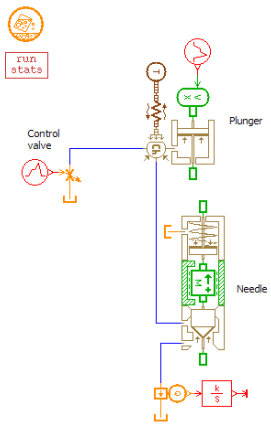

Figure 19. High Pressure Fuel Injection System Model

The student selected proper element or component icon symbols from different libraries and connected them with pipes and/or ducts. Each element has one or more design parameters. By changing the values of design parameters, the sensitivity of the system can be investigated. The exercise of this project was to conduct the sensitivity study and discuss its results. Figure 20 presents the discharge pressure out of the hydraulic chamber.

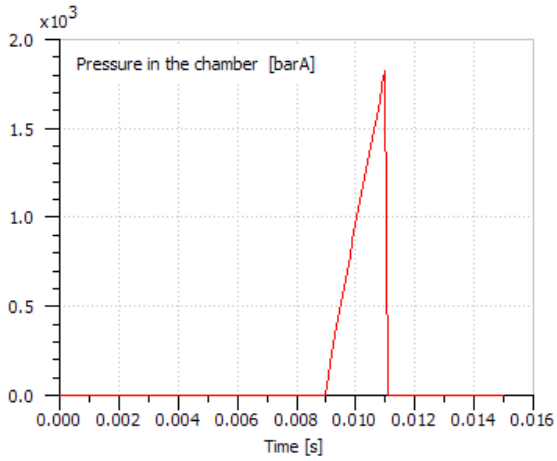

Figure 20. Discharge Pressure in the Hydraulic Chamber

Lab Project 10: Pneumatic Pressure Regulator System

The objective of this lab project was to simulate a pressure regulating device which is extensively used in pneumatic systems. This pressure regulator system consists of several types of valves and orifices such as flapper nozzle valve, modulated pneumatic orifice, damping orifice, spring-piston, mass with friction, and variable volume pneumatic chamber with heat exchange. The complete system model is shown in Figure 21.

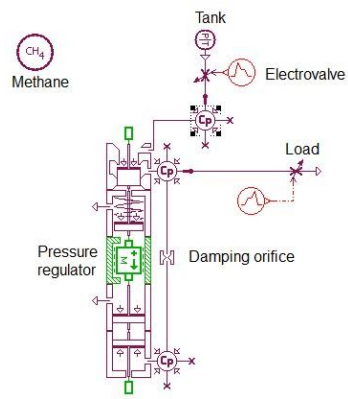

Figure 21. Pneumatic Pressure Regulator System Model

After the model was built, the student was asked to perform stability analysis by changing the values of the design parameters. It is found that the volume of the chamber has a significant effect on the stability of this discharge pressure. Figure 22 shows the stability plot of the discharge pressure.

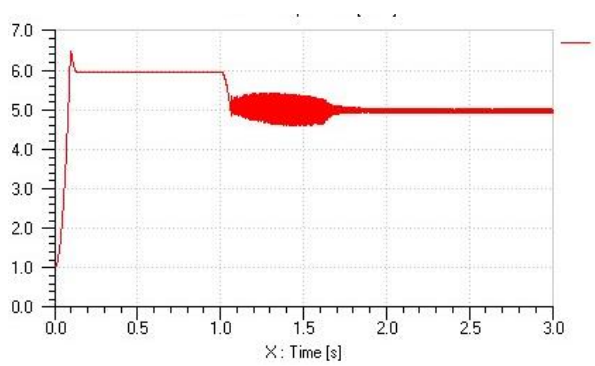

Figure 22. Pressure Stability Plot of the Regulator

Course Projects

There were two course projects assigned during the semester. The first course project was given a little after UART communication subject was presented in the class. The student was given a temperature sensor (MCP9701E) without any wiring diagram assistance to build the complete system by interfacing with the PIC microcontroller. The specifications of the project were to display the temperature in Celsius on a computer screen and then convert it to Fahrenheit. More than 85% students were able to finish the project in time. The rest of the students required an

extra week or two to complete it. Five weeks before the end of the semester, each student was asked to hand in a course project proposal that is related to mechatronic applications. After the proposal was approved by the instructor, the student proceeded with the course project. There were five submitted projects related to robot systems, three projects in FluidSim systems and two in AMSim simulations. All course project reports were submitted on time except two AMSim simulations. They were one week late from the due date.

The majority of the proposed robot projects integrated the LED display with obstacle sensing, such that when an obstacle was placed in front of the robot, in addition to moving the robot, a red LED diode will start to blink. One robot project was to add more limit switches so the robot could free itself out of a simple maze. The Fluidsim projects included designing a new clamping cylinder system, a horizontal material handling system that could move the cylinder block onto a moving conveyer. The most sophisticated system used a robot to transfer the cylinder block from one material handling system to a conveyor system. Figure 23 shows the multiple actions of the robot system. In order to have the robot move in a straight line and stop at a precise location, a cable was used to guide the robot movements and two optical distance sensors, one in the front and one in the rear, were installed to stop the robot in either direction. It was an excellent application of what the students had learned in the previous projects.

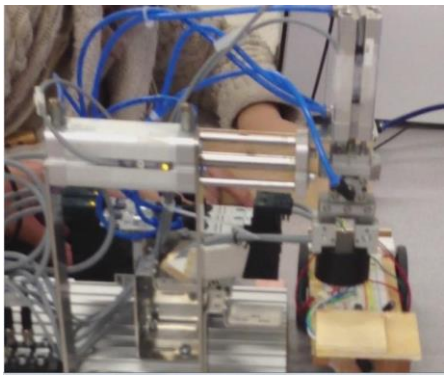

(a) Cylinder is loaded to the Robot

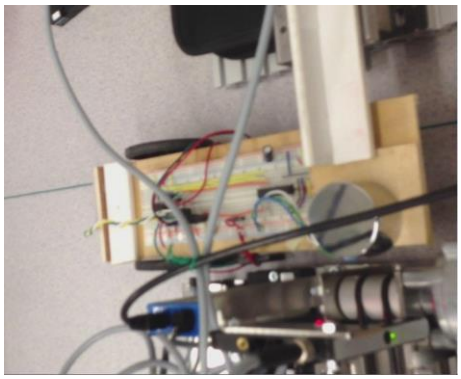

(b) Cylinder is pushed to Conveyor

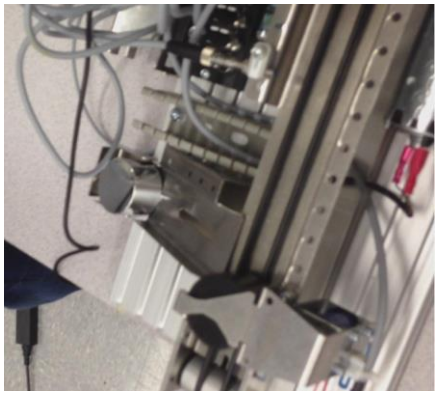

(c) Black cylinder passed the test station

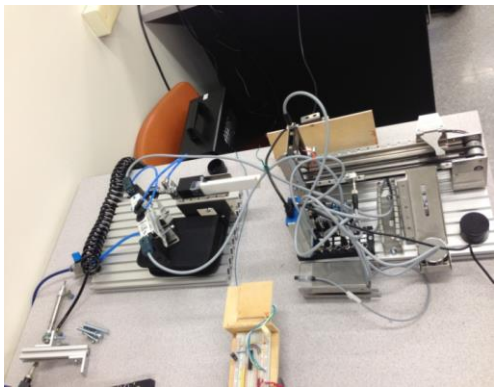

(d) Robot returns to material handling

Figure 23. Student Robot Course Project

The two simulation course projects were to (1) simulate the operation of a brake proportional valve to investigate the pressure differential between the front wheel and the rear wheel and (2) design a temperature controlled hot water heater. In considering the limited time that the students were exposed to the software, their successful models were quite satisfactory.

Assessments of the Course

ABET Outcome Assessment

The assessments of the course are based upon two ABET program outcomes: (a) an ability to apply knowledge of mathematics, science, and engineering and (b) an ability to design and conduct experiments, as well as to analyze and interpret data. Both are in-line with the objectives of this course. The first outcome is assessed by direct method of student's performance on homework assignments, quizzes, and exams. The second outcome is assessed by the lab performance, lab reports, and course projects.

The desired assessment criterion for the first outcome was 75% should score B or better. In homework assignments, 86% of all students met the desired outcome, 85% in quizzes, and 62% in exams met the target for the first exam and 85% met the outcome criterion in the final exam. The reason for the low percentage in the first exam may be due to the students having difficulty in remembering what they had learned in prior courses and not having enough time to review the subjects that were covered in mechanics, thermodynamics, fluid mechanics, heat transfer, and electrical circuits prior to the exam. However, they didn't seem to have any problem in understanding the new materials, such as microcontroller interfacing, mechanical and electrical actuators, and digital transducers.

The desired assessment criterion for the second outcome was for 80% of the students to score B or better. In all lab projects, the performance of student was very satisfactory. In the beginning, they showed some confusion and resentment to the system that they had never touched before. But they were able to learn very quickly and greatly enjoyed their achievements. Frequently, they improved upon the ideas that were given in the manual and were very proud of themselves. Each lab was scheduled for a three hour period; more than 60% of the students were able to finish it within two hours. Some of the students came before the lab time and got right to work independently, since the lab manual for all of lab projects was available on the VLT site and the exercises were fairly self-explanatory. There were three Lab Assistants (two mechanical engineering student and one electrical and computer engineering student) in the laboratory to answer questions and handle parts/tools. They were kept pretty busy during lab hours. From assessing the student submitted lab reports and course project reports, 92% had met the desired outcome.

Course Surveys and Evaluation

There were two course surveys given to the class. The first one was conducted in the middle of the semester, about six weeks after the course started. The purpose of this survey was to get some feedback from the student on the overall progress of the course including the pace of the course, the material presented during the lectures, the style of quiz/exam, the lab projects, and

any suggestions/comments that they may have. The results of this survey were 79% thought the pace was about right and13% considered it too fast, and 8% felt it was too slow. So the pace was adjusted slightly slower. On the subject of lecture presentations, 83% preferred power point slides and 16% preferred chalkboard note taking. On the robot lab projects, 83% considered them interesting and challenging, 17% thought they were interesting but not challenging, and 4% considered them to be too difficult.

Many positive comments and suggestions were received from the first survey. An interesting result is that the students preferred graded assignments over un-graded assignments. So the homework assignments were collected and graded. Many student wanted C-programming reviews. They complained the subjects were too broad. Apparently they were not used to an integrated subject type course.

The second survey was conducted at the end of the semester which was mainly to find out their preferences in types of lab projects and the course project. 40% of students preferred robot projects, 48% preferred MechLab projects, and 12% preferred LMS AMSim Lab projects. Among various projects in each category, Lab Project 3, 4, and 5 were the most favorable ones in the robot category, Lab Project 8 (material stacking) was the most favorable one in the MechLab projects, and Lab Project 10 (pressure regulator) was preferred over Lab Project 9 (fuel injector). Also, 65% of the students thought the number of lab projects was just about right, 13% considered them not enough, and 22% thought there were too many. Finally, 58% of the students considered the course projects to be interesting and challenging, 35% felt there wasn't enough time, and 8% considered the projects to be too difficult. From these results, we may increase more MechLab projects and decrease robot projects plus allow more time for the student to work on the course project.

The course evaluation conducted at the end of the semester is standard procedure for all ME courses. The numerical results from a total of 26 students are given in Table 1.

Table 1: Course Evaluation Results

1	Considering your goals, did the course fulfill your needs?	Completely (64%)	Not Completely but satisfactory (36%)	Inadequately (0%)
2	Were the objectives of the course clear to you?	Completely (78%)	Not Completely (22%)	Inadequately (0%)
3	Were the prerequisites adequate?	Totally (65%)	Satisfactory (35%)	Inadequately (0%)
4	You were assigned homework in relation to credit hours given in the course.	Just Enough (95%)	Too Much (5%)	Inadequately (0%)
5	Was the course challenging and interesting?	Always (68%)	Sometimes (32%)	Never (0%)
6	In your opinion was the course material "up-to-date"?	Yes (91%)	A little outdated (9%)	Most outdated (0%)

7	What is your opinion of the assigned text?	Excellent (80%)	Good (20%)	Fair (0%)
8	Was there undue repetition of material already covered in other courses?	Never (45%)	Rarely (32%)	Sometimes (18%)
9	On an overall basis how would you rate this course	Excellent (65%)	Good (26%)	Fair (9%)

From these results, the course appears to be a successful one. Item 8's 'repetition of the material' percentages may be due to the nature of the course which covered many subjects that were discussed in other ME courses. The overall evaluation of the course instructor was 3.83/4.0.

Follow-up Assessment: Effectiveness of the Course in Future Mechatronics Related Career

The ultimate goal of this course was to have the student be able to apply what they learned from the course to real cases. Although the course projects served to some extent to fulfill this intention, we were very pleased to find out that one group of students integrated microprocessor in their senior design project in the fall 2012 and two groups of students in the winter 2013. These rapid implementations are a good indication that after a student takes this course, they will be able to apply mechatronic technology in their future professional career.

In the fall of 2012 (during the same time period of ME472), an ME student applied the microcontroller to his senior design project which was an automatic golf ball feeding device. Figure 24 shows the above ground portion of the device. A PIC microcontroller with a limit switch was integrated into the design. A traveling tie supports the golf ball for the golfer to hit. When the limit switch senses the golf ball has been hit, it will turn on a motor and an air compressor to retrieve tie support under the turf and a new ball will feed automatically to the tie. Then, it will rise up to the ground for the golfer's next swing. The device worked smoothly and may have potential for commercialization.

Figure 24. Microcontroller Controlled Golf Ball Feeder

In the winter semester of 2013, one senior design group designed wireless remotely-operated window blinds by using a microprocessor with a remote and a signal receiver. The blinds could be rolled up, rolled down and the blind angles could be fully adjusted from the closed to open position. Two contact switches were also installed to prevent any overrun situations. The third group used a proximity sensor to create 3D image of an eyeball.

Conclusions

A mechatronics course for senior mechanical engineering undergraduate students was successfully developed and taught in the fall semester of 2012. The details of the course content and ten laboratory projects were presented in this paper. From surveys and evaluation conducted, students responded favorably to both the lecture content and the lab projects.

In conclusion, all three categories of the lab projects: robot systems, MechLab system and AMSim simulations, should be included in the course. They provide the student with different applications of mechatronic design and modeling that they will encounter in the industry after they graduate and leave campus.

Recommendations

From the received feedback and lessons learned, the following modifications to the course should be considered for the future:

- Selectively choose the review subjects that are more closely related to this course instead of following the textbook, so more time can be spent on the subjects that more relevant to their application.
- Add some real case studies into the course.
- Allow the student more time to work on the final course project.

Acknowledgements

The authors are very grateful for the support and encouragement from Department and the College of Engineering both in financial support and spiritual encouragement. Several students were involved in the development of the lab projects. They are Vijay Natarajan, Brannon Keina, Neil Naik, and Michael Suguitan from ECE department with Keyi, Xing, Xuejaio Li, and Simeng Xing from ME department. Without their diligent work, the lab projects would not be as successful as they were.

Bibliography

1. Vantsevich,V., web link , http://www.ltu.edu/engineering/mechanical/_bachelor.asp
2. Gillespie, B and Awtar S., web link http://www.youtube.com/watch?v=-ILC43priX4)
3. University of Detroit Mercy, web link http://www.udmercy.edu/catalog/undergraduate2012-2013/courses/link.php?sub=ENGR#ENGR4790.
4. Silva, W.D., Mechatronics-*A Foundation Course*, CRC press, 2010.
5. Onwubolu, G. C., *Mechatronics-Principles and Applications*, Elsevier, 2010.