2021 ASEE ANNUAL CONFERENCE
Virtual Meeting | July 26–29, 2021 | Pacific Daylight Time
Paper ID #34836

# Doing the Backflip: Using Classroom Technology to Adapt a Flipped Class to the HyFlex Teaching Model

**Dr. Nathan John Washuta P.E., The Citadel**

Dr. Nathan Washuta is an Assistant Professor in the Department of Mechanical Engineering at The Citadel in Charleston, SC. He received both his B.S. and Ph.D. in Mechanical Engineering from The University of Maryland – College Park. His primary research interests include Hydrodynamics, Turbulence, and Experimental Methods.

**Dr. Patrick Bass, The Citadel**

Patrick Bass is an assistant professor in the Department of Mechanical Engineering at The Citadel, in Charleston, SC. He received his B.S. degree in aerospace engineering from Embry-Riddle Aeronautical University, Daytona Beach, FL, in 2005, his M.E. degree in space operations from the University of Colorado, Colorado Springs, CO, in 2009, and his Ph.D. in materials engineering from Auburn University, Auburn, AL, in 2016. His main areas of research interest are electroactive polymers and space mechanics.

**Dr. Emily Kate Bierman, The Citadel**

Dr. Emily Bierman is an Assistant Professor in the Department of Mechanical Engineering at The Citadel. She received her B.S. in Mechanical Engineering from Purdue University, her M.B.A. from Clarke College, her M.S. in Mechanical Engineering from University of Wisconsin, and her Ph.D. in Mechanical Engineering from North Carolina State University. Her research and interests' areas include high pressure combustion, internal combustion engines, and engineering education.

# Doing the Backflip: Using Classroom Technology to Adapt a Flipped Class to the HyFlex Teaching Model


## Abstract

In recent years, the implementation of flipped classrooms in engineering education has experienced tremendous growth. This approach typically features asynchronous lecture content delivery outside of the classroom, which frees up in-class time to be spent on more active learning methods with instructor interaction, such as problem-solving sessions. The flipped classroom model was implemented into a sophomore-level Computer Applications course at The Citadel a number of years ago, with positive results. In the wake of the COVID-19 pandemic, classes at The Citadel have adopted the HyFlex teaching model, in which a course is simultaneously taught in-person in the classroom and via synchronous online delivery. While this method reduces classroom capacity to enable social distancing, it has also impacted the ability of the instructor to provide one-on-one instruction to students as they complete the in-class exercises. The use of classroom technology, including various cameras, annotation devices, and supporting software, has not only solved some of the challenges introduced in the HyFlex model, but has also provided improvements upon the standard flipped class. The present paper will discuss the classroom technology and methods used to supplement traditional in-class assistance to provide one-on-one interaction to students both in the classroom and those attending synchronously online, with a discussion of lessons learned and best practices. Direct and indirect course assessment and student perceptions of learning will be compared between the traditional flipped classroom and a flipped class using the HyFlex model.


## Introduction

A flipped or inverted class is a method by which lecture content and hands-on activities are flipped from their traditional roles in a lecture-based class. This is accomplished by delivering course lecture content to students outside of the classroom, freeing up in-class time for hands-on activities [1]. This concept has experienced a rise in popularity in recent years due to the availability of widely disseminated video lecture content and proven benefits to student engagement in the classroom [2]. Because lecture content is moved outside of the classroom, in-class time is typically devoted to problem solving sessions and more active learning approaches. It has been shown in the literature that the primary benefits of this method come not from an increase in effectiveness of out-of-class lectures, but from the increase in time devoted to hands-on practice, active learning [3], and instructor-guided practice [4]. This method is a natural fit for computer applications courses where hands-on guided practice is paramount to properly understand and use software applications.

While these methods have proven effective in a traditional classroom, public health precautions adopted by many colleges and universities in response to COVID-19 have changed the way course content is delivered to students. These precautions include social distancing, mask wearing, and sometimes a full transition to remote learning. In addition to these safety measures, the Centers for Disease Control and Prevention (CDC) recommends a number of other precautions for in-person classes, including small classes, utilizing cohorting with alternating or

staggered schedules, eliminating mixing of student groups, eliminating the sharing of physical objects between students and teachers, and frequent sanitation [5].

As vaccines become widely available and colleges and universities begin to reopen, teaching using a hybrid flexible (HyFlex) course format may serve a role as a stepping stone from fully remote to fully in-person instruction [6], or alternatively as a mitigation strategy in the event of localized outbreaks [7]. The HyFlex model is a teaching approach in which a class is taught simultaneously in person and remotely via synchronous online delivery [8]. Because students can participate in a live class whether they are in-person or remote, the classroom capacity can be reduced so that only a portion of the students are in-person on any given day, enabling greater social distancing. This method can accommodate either student choice of in-person or remote learning or the class can be broken into cohorts that attend on alternating days. By using cohorting, all students still receive the benefits of in-person instruction while in the classroom, but social distancing can be maintained. In some implementations, asynchronous remote learning is also included as a third pillar of this approach.

This model, implemented correctly, has the potential to serve as a happy medium between in-class instruction and fully online education [9]. This method allows for both increased instructor-student interaction as well as decreased classroom capacity to allow for social distancing in the classroom. For a full-capacity class, splitting the class into two cohorts allows for one cohort to attend in person while the other cohort attends remotely. Each lesson, these cohorts alternate so that they are each in the classroom for half of the lessons and remote for the other half. With a classroom at half capacity, seats or work stations can typically be spaced to allow for 6-foot social distancing between all students, while the remainder of students attend remotely. Paired with proper adherence to mask guidelines, proper sanitation of public spaces, and contact tracing, this method can work to reduce disease transmission while maintaining many benefits of in-person instruction.

While debating the merits and drawbacks of this Hyflex model are not the focus of this paper, their implications for the delivery of instruction necessitate changes to the traditional structure and delivery of a flipped class. The implementation of COVID protocols around social distancing and sharing of objects alone introduce difficulties to the active learning methods that characterize a flipped class. While working on problem solving or completing in-class exercises, social distancing limits the ability of the instructor to provide one-on-one guidance and critique. Social distancing can also limit student group work and collaboration, which reduces the benefits garnered from peer-to-peer teaching. Eliminating the sharing of objects to reduce surface to surface transmission has the effect of disrupting hands-on learning where students interact with physical objects. These physical demonstrations and interactions allow students to link theoretical concepts to physical intuition and increase student engagement. Due to the split nature of HyFlex classes, these issues are exacerbated and further issues related to instructor-student interaction and guided practice are introduced. Students that attend class remotely are instantly limited to a more passive role, where they cannot interact with physical objects in the classroom or communicate freely with their classmates. Due to remote delivery methods, they

also have a reduced ability to choose what to focus on in the classroom, as they are at the mercy of the cameras and microphones in the classroom to act as their eyes and ears.

While these methods introduce difficulties as compared to pre-pandemic in-person instruction, the use of classroom technology can be used to make up for the difficulty of instructor-student interaction in remote learning. Through this increased interaction and technological solutions, the in-person and remote experience can be blended together in order to both solve these new issues as well as improve upon the pre-pandemic classroom experience. Indeed, without classroom technology, the HyFlex model would be severely limited in its ability to provide a seamless experience between in-person and remote learning.

**Implementation**

The present paper discusses the adoption of the Hyflex teaching model at The Citadel beginning in Fall 2020 and the classroom technology used in the adaptation of a flipped undergraduate CAD course in Mechanical Engineering. A number of technological solutions are discussed, along with the classroom activity types for which they are useful, in addition to a discussion of lessons learned and best practices. Perspective and methods used in an additional computer applications course in programming are also discussed. While this course is not flipped, many similar active learning techniques are utilized and lessons from these experiences can be used to inform a flipped course.

The Computer Applications course at The Citadel is typically taken in the Fall semester of sophomore year in the Mechanical Engineering program. This course focuses on teaching students to use and apply computer-aided design (CAD) to real-world problems using SolidWorks. This course was originally taught in a traditional lecture format, but was transitioned to a flipped class in 2017 [10]. In fully in-person instruction, such as pre-pandemic implementation, lecture content is delivered outside of class using the SolidProfessor subscription video service. Using this service, collections of short video lectures along with subsequent reading quizzes are assigned to students to complete weekly prior to attending class in person. In class time is spent in a computer lab and often begins with short recaps of the lecture material and demonstrations, but the majority of class time is spent on in-class exercises for the students to complete as practice. These in-class exercises are collected into a workbook that helps the students to take notes on the material or work ahead as they see fit [11]. In class, students are able to attempt and complete these in-class exercises at their own pace as the instructor roams the classroom to provide individual help and guidance as students have questions or get stuck.

Similar instructional methods have been implemented into the freshman-level Engineering Computer Applications course at The Citadel, which focuses primarily on programming using MATLAB, but also includes content related to generating engineering drawings by hand. In this course, lecture content is delivered in class, typically lasting no longer than 20 minutes out of a 100-minute course. The remainder of time in class is devoted to in-class exercises using a workbook, similar to the methods used in the CAD course. This course is also taught in a computer lab, where MATLAB is installed at every work station. While this course is

not flipped, lessons learned from the active portions of this course can be used to inform the teaching methods used in a flipped computer applications course.

In response to COVID-19 during the Spring 2020 semester, all classes at The Citadel transitioned from fully in-person instruction to fully remote instruction. For the courses discussed in this article, only the freshman programming course was affected in this semester. In order to adapt this course, an asynchronous approach was used in which lectures were recorded as voice over PowerPoint and released to students on each class day. The in-class exercises typically completed in the classroom were still assigned to students as practice exercises and video recordings of the instructor generating solutions to each exercise were uploaded to the course learning management system (LMS). Students had to complete these exercises and submit them for participation credit. A number of technological solutions, discussed below, were used in this course in order to help with grading electronically, annotating PowerPoint slides, and recording the creation of engineering hand drawings. While none of these activities involved synchronous instruction, they informed the techniques used in later courses.

In both Summer and Fall 2020 and continuing in Spring 2021, all courses adopted the HyFlex teaching model. In this implementation, all classes are divided into two cohorts such that each cohort fits into the classroom while maintaining social distancing and the overall enrollment of each section remains largely the same as pre-pandemic instruction. Each class period, one cohort attends class in person and the other cohort attends remotely via Zoom, and the instructor teaches to both groups simultaneously. Each lesson, the cohorts alternate so that the cohort who attended remotely in the previous class period then attends in person and vice versa. In the event that a student displays symptoms of COVID-19, tests positive, or is deemed a close contact of someone who has tested positive, that student quarantines for a specified period of time in accordance with CDC guidelines and attends class remotely via Zoom for the duration of their quarantine.

In Summer and Fall 2020, the sophomore-level flipped CAD course was adapted to the HyFlex model. While the course is normally taught with all students in a single computer lab, the remote attendance of half of the students at any given time proved challenging. The out-of-class video lecture component remained unchanged from previous iterations, but the class time experience had to change to accommodate both cohorts of students. All students were required to install SolidWorks on their personal computers so that they could still complete in-class exercises while attending remotely. A number of technological solutions, discussed below, allowed the instructor to provide individual instruction to remote students and allowed students to examine details of physical components without being able to physically interact with them in the classroom. In Spring 2021, the freshman programming course was also adapted to the HyFlex model, using similar methods to provide individual critique to student work.

**Classroom Technology**

Upon transitioning to the HyFlex model, all classrooms at The Citadel were outfitted with a SWIVL device and all faculty were provided with an iPad. The SWIVL consists of a base that is typically mounted on a tripod stand, a USB speaker that plugs into the base, and a marker that

acts as a microphone and tracker. When an iPad is set into and paired with the base, the SWIVL base swivels so that a sensor on the front tracks the marker, worn around the instructor's neck. Using this system, the instructor signs into Zoom using the iPad, which then pivots to follow the instructor as class is being taught. The remote students can hear the instructor through the microphone on the marker and the instructor can hear the remote students through the USB speaker. This setup can be seen in Figure 1, where the iPad connected to the SWIVL base is shown in Figure 1a and the marker that the instructor wears on a lanyard is shown in Figure 1b. This SWIVL base is beneficial primarily because of its ability to follow the instructor. In classrooms specially set up for lecture capture at The Citadel, cameras in the room are either fixed or must be controlled manually by the instructor. The SWIVL takes away this manual control element. The audio using this setup is also an improvement upon an iPad alone or a webcam setup. The microphone on the marker and USB speaker greatly improve the ability to communicate with students who attend remotely. The biggest drawback using this method is that the video quality is limited to the capability of the iPad's front-facing camera. Depending on the placement of the SWIVL, this can make it difficult for remote students to see the board.

(a) (b)

Figure 1: A SWIVL device showing (a) the SWIVL base and USB speaker and (b) the marker

While using Zoom through the iPad in the primary means of projecting a view of the instructor to the students, the projector in each classroom runs on a separate computer and it is often useful to sign into the Zoom meeting with this computer also. Through this computer, a number of other in-class technologies can be utilized. The simplest method is to use the Share Screen feature on Zoom from this computer so that the exact image projected onto the screen in the classroom is shared at full resolution to remote students, reducing issues with the iPad camera quality. Alternatively, a separate camera can be connected to this computer for different types of demonstrations.

One type of camera that can be useful in the classroom when connected to Zoom is a document camera, such as the Okiolabs OKIOCAM. This camera can be folded up for easy transport to the classroom, as in Figure 2a, or unfolded to be set up and show a full page from directly above, as in Figure 2b. This camera is also able to pivot to work as a standard webcam. This camera is used heavily in the freshman programming class during the engineering hand

drawing portion of the course. When set up as a document camera, the entire drawing process can be shown, including where and how to make the drawings on the sheet and how best to utilize a straight edge, as in Figure 3a. This allows students to follow along in the drawing process from a close-up perspective. In previous iterations of the course, these drawings were created on a whiteboard at the front of class. This method was useful to show students the process of making drawings, but what students saw was somewhat different than the tasks they were actually performing; the whiteboard lacks the same gridlines that students use on graph paper, straight lines are drawn using a yard stick instead of a ruler, and markers on a whiteboard cannot convey the different thicknesses of lines students need to reproduce on paper. When using the document camera, students see the exact process that they go through in making their own drawings. An alternative use for this camera is for physical part demonstrations from a relatively close perspective, as in Figure 3b. This is useful for showing features of parts that students would normally interact with when in the classroom. Figure 3b shows examples of failed prints from 3D printed parts in order to facilitate a discussion of typical issues encountered in 3D printing and how to minimize those in the design process. With the elimination of sharing physical objects between students, this camera has the ability to replicate some of those activities.

(a) (b)

Figure 2: An OKIOCAM document camera shown (a) folded and (b) unfolded

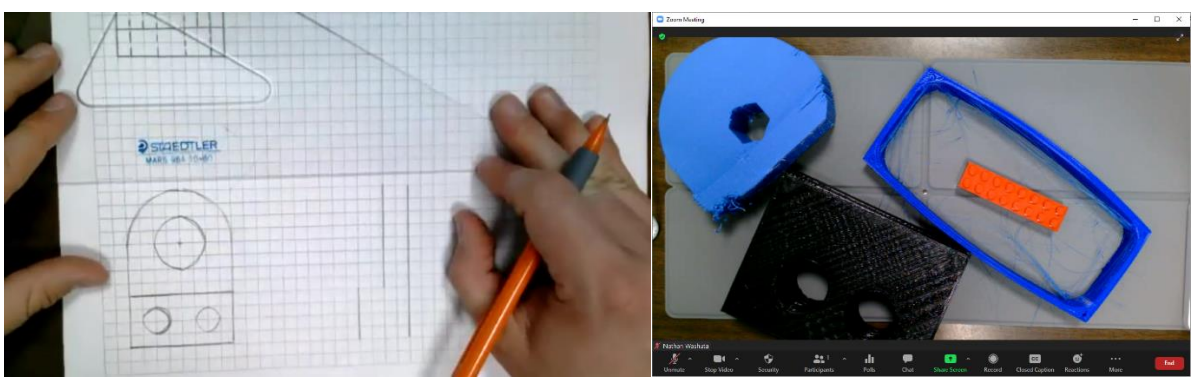


(a) (b)

Figure 3: Examples of using a document camera in class for (a) engineering drawings and (b) physical part demonstrations

Another type of camera that is useful in a flipped class is a USB digital microscope, such as the Bysameyee USB Digital Microscope. Many versions of this product exist in various forms, but this particular microscope is stand-mounted and can zoom in with between 40X and 1000X magnification, as shown in Figure 4. For remote students and even those in the classroom who are not able to pass around physical objects, this camera is able to give students a view of the fine details of an object. With the iPad camera, a webcam, or a document camera, students are often unable to make out fine details. This microscope camera is able to show some of these fine details in order to replace the experience of looking up close at an object. While students do not get to physically interact with an object to feel its surface characteristics or its weight, the benefit of using this over simply passing an object around is that it adds the ability for the instructor to point out and explain fine details of the object in front of the class. In the sophomore-level CAD course, this camera is used in a number of lessons as shown in Figure 5, such as generating CAD models of Lego Bricks, a discussion of knurling annotation in engineering drawings, and a demonstration of surface finishes in 3D printing.


Figure 4: The Bysameyee USB Digital Microscope, using a penny for scale


(a) (b) (c)

Figure 5: Magnified views of (a) a Lego brick, (b) knurling on a ratchet handle, and (c) surface roughness on a 3D printed part, using a digital microscope

One of the most useful ways to integrate classroom technology is through directly annotating digital materials while using the Share Screen feature in Zoom. A number of pieces of hardware and software can be used to enable this function for a variety of use cases, and a number of those will be discussed herein. These techniques enable the instructor to project clear

hand-written notes to students in and out of the classroom, replicating the experience of writing on a whiteboard, but they also allow for annotation of other materials and images, enhancing the experience of a traditional classroom.

One piece of technology that helps in screen annotation is a graphics drawing tablet, such as the Huion Inspiroy HS64 or HS610 Graphics Drawing Tablets, shown in Figure 6a and 6b, respectively. These tablets plug into any computer through USB and, using the included stylus, pen inputs on the tablet are transferred to the computer. It is powered through the USB connection and needs no external power source. A smaller tablet, like the one shown in Figure 6a, is more portable and easier to use from a desk or podium at the front of a classroom, while a larger tablet allows for higher resolution when writing. This tablet can be connected to the room computer that displays to the projector. While using Zoom's Share Screen function, any content that is annotated on this tablet can be seen both by the students on the room projector as well as by students attending remotely via Zoom.

(a) (b)

Figure 6: Huion graphics drawing tablets, (a) HS64 and (b) HS610

Another tool that has been highly effective for annotation in HyFlex course delivery is the use of the Microsoft Surface Pro and its included stylus pen. The Surface Pro is a laptop/tablet hybrid computing system and the stylus enables the user to write directly on the screen in a manner similar to writing in a notebook. When combined with the Share Screen feature in Zoom, board notes can be simultaneously cast onto a projection screen in the classroom for use in face-to-face instruction as well as streamed to remote students, enabling similar annotation functionality to that found with graphics drawing tablets. While this method separates the Surface Pro as an annotation device from an in-classroom computer that runs the projector, there are two primary methods to overcome this issue. The first method is to directly connect the Surface Pro to the projector, which may include lengthy HDMI cables and adapters if the projector cannot be connected to through WiFi. The second method is to connect both the Surface Pro and the projector to Zoom so that the Surface Pro shared screen is still visible on the projector. Another consideration with the Surface Pro is that it may need a convenient power outlet to use for ensuring the Surface Pro battery does not run out of power. Figure 7a shows the

Surface Pro and stylus and Figure 7b is a screenshot from a live class session, hosted in Zoom, with real-time board notes shown along with the instructor video feed. Though this section lists capabilities specific to the Surface Pro, any combination of computer or tablet with a compatible stylus can produce similar results.

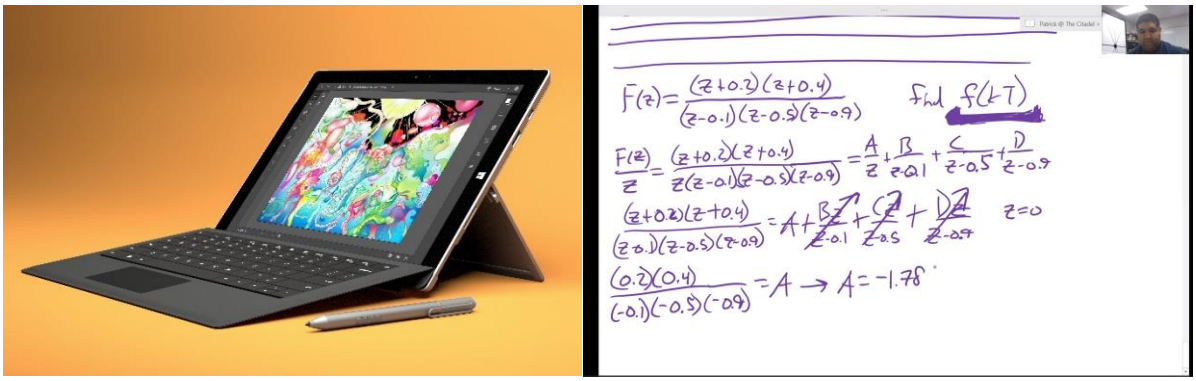


(a) (b)

Figure 7: Images of (a) A Microsoft Surface Pro and (b) an example of it being used to write notes on the Zoom Whiteboard

While these various tablet devices allow for pen inputs to translate to the computer screen, a number of software applications are particularly useful for enabling classroom activities. Due to the nature of Share Screen in Zoom, the notes seen by remote students are as clear as the notes seen by the students in the classroom; the limitation of camera resolution and placement of the live-streaming recording device no longer must be considered in this application. Some of the most useful software applications found by the authors include Microsoft Office, Drawboard PDF, and Zoom's Annotate feature.

In one application, such as a lecture-based class, these tablets can be used to annotate lecture material to replicate the experience of writing on a whiteboard in front of the class. This can be accomplished using a number of Microsoft Office applications, such as Microsoft Word, Excel, or PowerPoint, where pen inputs can be directly applied as annotated text and be saved within the file. This can be useful in adding additional detail to what students would see by simply watching a PowerPoint presentation or when following along with an example problem. Some examples of this are shown in Figure 8. Using a graphics drawing tablet, the instructor can annotate directly onto PowerPoint slides, annotate their own screen, or replicate notes that would normally be written on a whiteboard. This experience can also be replicated simply using Zoom's Whiteboard feature, shown in Figure 7b, which provides a blank screen to write on and each screen can be saved to a PNG or PDF file. In the context of engineering drawings, this tablet is also useful in conjunction with Microsoft Whiteboard, which provides a graph paper-style grid on which engineering drawings can be drawn, shown in Figure 8b. This interface provides students with an example of proper drawing techniques while both remote and in-person students receive the same experience.

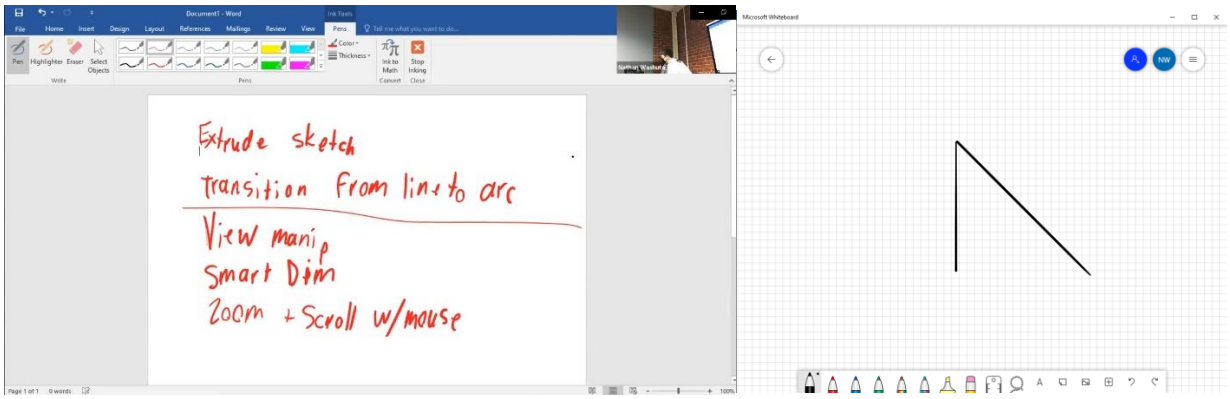


(a) (b)

Figure 8: An example of an instructor using a Huion tablet to (a) write notes using Microsoft Word and (b) create an engineering drawing using Microsoft Whiteboard

While the Share Screen feature is effective at showing the instructor's screen to remote students, the most beneficial way of using this to increase student interaction is by asking remote students to share their screens. Just as the instructor would look at student screens to provide one-on-one help in a pre-pandemic classroom, this allows the instructor to diagnose any problems the student is having. Naturally, with a computer applications course, the student's work is being done on their computer, so this allows for the instructor to see their work. As the instructor troubleshoots issues with the student, they can follow along step-by-step as the student performs the work to correct the issue. Along with this screen sharing, Zoom's annotate feature can be leveraged so that the instructor can mark the student's screen as they share in order to better guide them through the process.

Using Zoom's annotate feature while a student shares their screen, the instructor is able to write on the student's screen or draw circles or arrows to direct students to certain software features. Examples of this method are shown in Figure 9, where the instructor is able to write on the tablet and those annotations are displayed directly over the student's screen. In some ways, this mimics the one-on-one guidance that the instructor is able to provide to students in the classroom. In a pre-pandemic classroom, the instructor could go to the student's work station, see their screen, and point to the monitor or gesture to give advice or help with troubleshooting. While these drawing tablets do not fully replicate this experience, they do provide some benefits to the classroom that are even greater than previous methods. Using this screen sharing, the image of the student's screen is shared not just with the instructor, but also with other remote students and on the classroom projector. Because many of the issues that students encounter are common issues, this one-on-one troubleshooting acts as additional instruction for other students on how to overcome common problems in their own models.

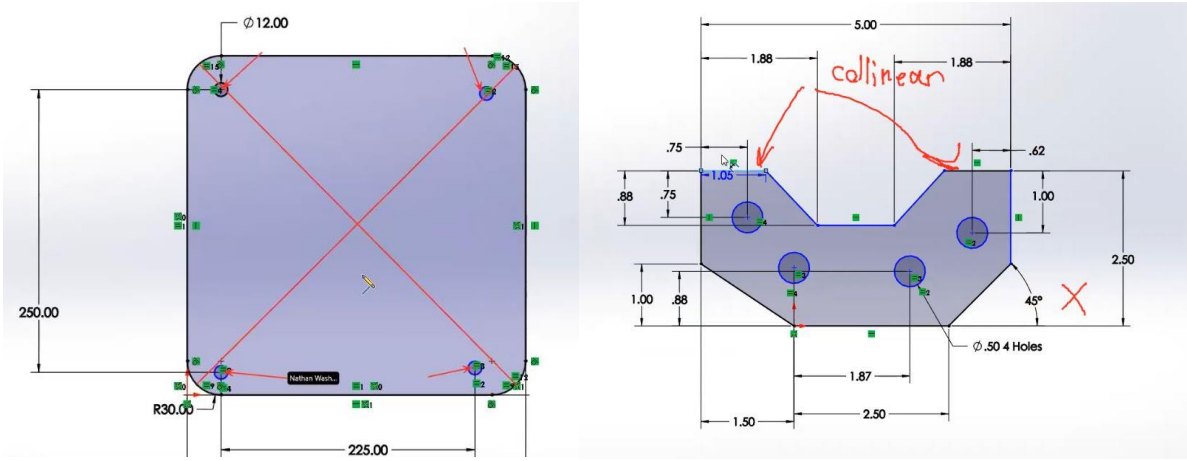


(a) (b)

Figure 9: Examples of instructor annotation on shared student screens to help with part sketching

**Student Perceptions of Learning**

At the end of each semester, students complete end-of-course surveys that are administered institution-wide, which include questions about both the course and the instructor. While many questions on these surveys use a Likert scale, there are a number of free response questions for students to provide specific feedback. In response to the adaptation of courses to fully online and HyFlex course formats, many questions on these institutional surveys changed dramatically from before the pandemic, although a few questions remained from pre-pandemic surveys. Some of these questions common to both Fall 2019 pre-pandemic and Fall 2020 surveys for the sophomore CAD course are shown in Table 1.

Table 1: Student responses on end-of-course surveys, comparing in-person to HyFlex instruction

| | Fall 2019 | Fall 2020 |
|---|---|---|
| In this course many methods are used to involve me in learning | 4.50 | 4.47 |
| My professor makes good use of examples and illustrations | 4.67 | 4.68 |

Many of the new questions on these surveys revolved around student interaction and use of technology. While comparisons cannot be made between the HyFlex course and the fully in-person pre-pandemic version of the course, student perceptions of this flipped HyFlex course can be compared to overall institutional averages, shown in Table 2. While all courses at The Citadel were required to utilize the SWIVL to perform HyFlex instruction, it is unclear to what degree other classroom technology was implemented across campus, although this does provide a useful baseline for student perceptions when compared to their other courses.

Table 2: Student responses on end-of-course surveys, comparing the CAD course to the rest of the institution

| | Institution | CAD course |
|---|---|---|
| In this course many methods are used to involve me in learning | 4.30 | 4.47 |
| The course offers opportunity for interaction and communication with the professor | 4.50 | 4.73 |
| The course offers opportunity for interaction and communication with other students | 4.40 | 4.57 |
| The course uses a variety of technology and multimedia tools to enhance my learning | 4.40 | 4.67 |

In free responses to the question, "What did you like most about this course?" a number of students complimented the active learning approach in this course that kept them engaged. A number of these student responses are included below:

- "The thing I liked most about this class is that everything was hands on learning and it really kept my attention all year."
- "I enjoyed this because I am a visual learner and engaged me in the learning process."
- "I enjoyed how hands on it was. The practice we got with Solid works was really helpful in learning how to use the CAD program. Especially since it was all in class practice and we could ask questions when we go stuck."
- "The in-class exercises really taught me to practice and learn in this course"
- "I thought being able to visualize the things you are drawing is very cool."
- "I liked the ability to just sit down and do the work myself instead of having to listen to a lecture the whole class"
- "The implementation of interactive learning in designing 3D parts, assemblies, drawings, and materials."
- "I like using SolidWorks and the interactive way it was taught."

When asked what they liked most about the professor, student responses often mentioned the instructor's availability to answer questions and provide one-on-one instruction to help troubleshoot parts. A number of their responses are listed below:

- "He is always available to help in class"
- "was able to explain any problems with the part files."
- "helps you figure out where you went wrong on the work and helps you understand how to fix it."
- "Great at answering questions and explaining concepts in solid works. Very helpful when getting stuck."

When asked to provide constructive suggestions to improve the course, students described a number of issues that are common to teaching during the pandemic, including student-student interaction and physical interaction with the professor, but also praised the availability of recorded video lectures. Sample responses are listed below:

- "Class engagement and the ability to access lectures online proved to be very helpful this semester. Maybe in the future even after things with the virus die down it may be wise to still find a way to record the lecture if possible."

- “I'd like to see more allowed collaborative interaction between students”
- “I did not like how the zoom prevents physical interaction with the professor.”

**Course Assessment Results**

For the purposes of record-keeping for ABET accreditation, each year a course assessment is performed for every Mechanical Engineering course at The Citadel. As a part of this, both indirect and direct assessment data of student performance is collected for each course outcome. Direct assessments are based on student performance on particular graded submissions linked to each of the course outcomes and indirect assessment is performed through Likert-scale surveys in which students self-assess their ability to perform each course outcome. In order to quantify the impact of the transition from fully in-person to the HyFlex delivery of the flipped CAD course, direct assessment results can be compared between the Fall 2019 pre-pandemic and Fall 2020 hybrid semester. While these results do not specifically speak to the role of classroom technology, they do help to quantify student performance generally and can be used to determine if any statistical difference can be seen between the groups of students. This assessment data can be seen in Table 3. In this data, it can be seen that direct assessment results for Fall 2020 are lower in 4 of 6 course outcomes and indirect assessment results are higher in 5 of 6 course outcomes when compared to Fall 2019. However, none of these differences in assessment data are statistically significant, indicating that this data cannot prove a difference in student performance between the two groups of students. This indicates that student performance did not suffer significantly due to the hybrid course delivery, although there is no way to quantify the role of classroom technology in this circumstance.

Table 3: Course assessment data comparison for the sophomore CAD course between pre-pandemic and HyFlex instruction

| | FALL 2019 | | FALL 2020 | |
|---|---|---|---|---|
| **Course Outcome** | **Direct Assessment** | **Student Self-Assessment** | **Direct Assessment** | **Student Self-Assessment** |
| 1. I can create and analyze complex parts in CAD (SolidWorks) using appropriate design intent. | 4.47 | 4.61 | 4.44 | 4.80 |
| 2. I can troubleshoot parts and assemblies to diagnose and resolve issues with the design. | 4.33 | 4.51 | 4.21 | 4.60 |
| 3. I can utilize equation-driven part parameters and configurations to generate part variations. | 4.81 | 4.02 | 4.60 | 4.40 |
| 4. I can combine parts into assemblies using mates that retain the intended motion of the assembly. | 4.67 | 4.77 | 4.57 | 4.88 |
| 5. I can analyze parts using finite element analysis and thermal analysis. | 4.31 | 4.51 | 4.39 | 4.88 |
| 6. I can communicate component and assembly information through engineering drawings that conform to industry standards. | 4.43 | 4.49 | 4.52 | 4.48 |

**Conclusions**

This paper discusses the adaptation of a flipped computer applications class to the HyFlex teaching model in response to the COVID-19 pandemic. Because safety precautions

prevent all students from attending class in-person simultaneously, half of the students must attend the course remotely via synchronous Zoom. The use of classroom technology to replicate the active learning necessary in a flipped classroom is discussed. Much of this technology focuses on replacing physical demonstrations, writing class notes on a whiteboard, and individual student-teaching interactions. Through the use of these various technologies, many of the benefits of the flipped classroom are able to be maintained. Student perceptions from institutional surveys reinforce the idea that active learning and student engagement are retained in the course, despite the challenges of the HyFlex environment. From both direct and indirect assessment data, there is no statistical difference in student performance between fully in-person and HyFlex course delivery.

**Bibliography**


[1] J. L. Bishop and M. A. and Verleger, "The Flipped Classroom: A Survey of the Research," in *Proceedings of the 120th ASEE Annual Conference & Exhibition*, Atlanta, GA, 2013.

[2] G. Akçayır and M. Akçayır, "The flipped classroom: A review of its advantages and challenges," *Computers & Education*, vol. 126, pp. 334-345, 2018.

[3] J. L. Jensen, T. A. Kummer and P. D. d. M. Godoy, "Improvements from a Flipped Classroom May Simply Be the Fruits of Active Learning," *CBE - Life Sciences Education*, vol. 14, pp. 1-12, 2015.

[4] C. A. Aji and M. J. Khan, "Flipped Classroom and its Impact on Student Engagement," in *Proceedings of the 126th ASEE Annual Conference & Exposition*, Tampa, FL, 2019.

[5] Center for Disease Control and Prevention, "Operating schools during COVID-19: CDC's Considerations," 1 March 2021. [Online]. Available: https://www.cdc.gov/coronavirus/2019-ncov/community/schools-childcare/schools.html. [Accessed 4 March 2021].

[6] L. Asmelash, "The simple reason why colleges are reopening," CNN, 22 August 2020. [Online]. Available: https://www.cnn.com/2020/08/21/us/colleges-universities-covid-reopen-trnd/index.html. [Accessed 7 March 2021].

[7] K. Kelly, "COVID-19 Planning for Fall 2020: A Closer Look at Hybrid-Flexible Course Design," PhilonEdTech, 7 May 2020. [Online]. Available: https://philonedtech.com/covid-19-planning-for-fall-2020-a-closer-look-at-hybrid-flexible-course-design/. [Accessed 8 March 2021].

[8] B. J. Beatty, Hybrid-Flexible Course Design, EdTech Books, 2019.

[9] A. Mandavilli, K. Taylor and D. and Goldstein, "C.D.C. Draws Up a Blueprint for Reopening Schools," *The New York Times*, 12 February 2021.

[10] M. Bubacz, N. Washuta and P. Bass, "A Flipped-Classroom Format Applied to a Software-Based Course," in *Proceedings of the 2018 ASEE Southeast Section Annual Conference*, Daytona Beach, FL, 2018.

[11] N. Washuta, R. Rabb, E. Bierman, P. Bass, J. Howison and J. Righter, "Using Course Workbooks as a Classroom Supplement," in *Proceedings of the 2020 ASEE Virtual Annual Conference and Exposition*, 2020.