Implementation of the Chua's circuit and its applications

Mahesh Mulukutla and Cherif Aissi[1]

University of Louisiana at Lafayette, College of Engineering
Lafayette, LA 70504, USA

Abstract

In this paper the Chua's circuit is investigated. This oscillator consists of a passive RLC_1C_2 block coupled to an active nonlinear resistor (Chua's diode). Electronics Workbench (EW) simulation results showing the existence of chaos are given. The circuit implementation and experimental results referring to the double scroll attractor are reported. Applications of the Chua's circuit in the area of communication are discussed.

Introduction

Chaos is a phenomenon that occurs widely in dynamical systems. From educational point of view this phenomenon was considered to be complex and was never given importance because there was no simple analysis available, which could help students to delve into this interesting phenomenon and get some hands on experience. In the current scenario, since the presence of chaos is being realized in many fields, it is good to have some insight into this phenomenon right from the undergraduate level. In this paper we develop some intuition into this phenomenon using a circuit called Chua circuit[1,2,3] and provide necessary circuit theoretical background and practical details to assist the reader. The criterion for choosing Chua's circuit is its simplicity, though simple, it exhibits a variety of chaotic phenomena exhibited by other complex circuits, which makes it a popular circuit. There are two types of chaotic systems, autonomous and non-autonomous[4]. Chua's circuit is an autonomous system because there is no external signal injected into the system.

In this work, we show how to build Chua's circuit using off-shelf components, describe the design methodology for constructing the nonlinear resistor and present the experimental and simulation results of the Chua's circuit. Efforts are in progress to extend the Chua's circuit and produce multi-scroll[5,6] attractors. Chaotic phenomenon can be used in real world applications like secure communication, medical field, fractal theory and many more. This paper discusses in brief the application of chaos in secure communication[7].

Background

The Chua's circuit (a third-order autonomous, dissipative electrical circuit) has been investigated thoroughly at the experimental, numerical and analytical levels. This circuit, known for its rich repertoire of nonlinear dynamical phenomena and has become a universal paradigm for chaos.

[1] This work was supported by the Louisiana BORSF contract No. LEQSF(1999-2001)-RD-A-47

Fig. 1(a) shows the Chua's circuit that includes two capacitors, a resistor, an inductor and a nonlinear resistor *NR* (a pair of negative resistors). Applying KCL and KVL, the Chua's circuit is described by three differential equations:

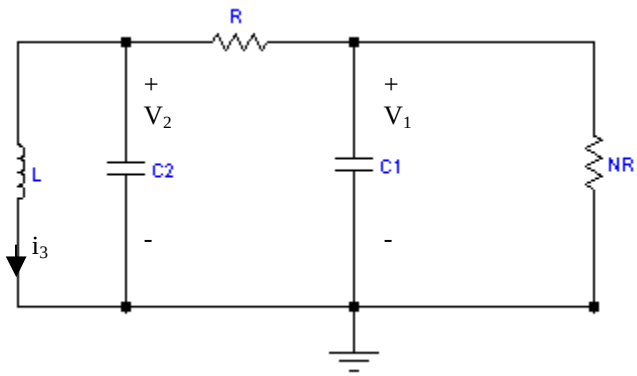

Fig 1. (a) The unfolded Chua's circuit

$$
\begin{aligned}
C_1 \frac{dv_1}{dt} &= \frac{1}{R}(v_1 - v_2) - f(v_1) \\
C_2 \frac{dv_2}{dt} &= \frac{1}{R}(v_1 - v_2) + i_3 \\
L \frac{di_3}{dt} &= -v_2
\end{aligned}
\tag{1}
$$

Where the nonlinear Chua's function, shown in Fig. 1(b), is described by

$$
f(v_R) = m_o v_R + \frac{1}{2}(m_1 - m_o)\left\{ \left| v_R + B_p \right| - \left| v_R - B_p \right| \right\} \tag{2}
$$

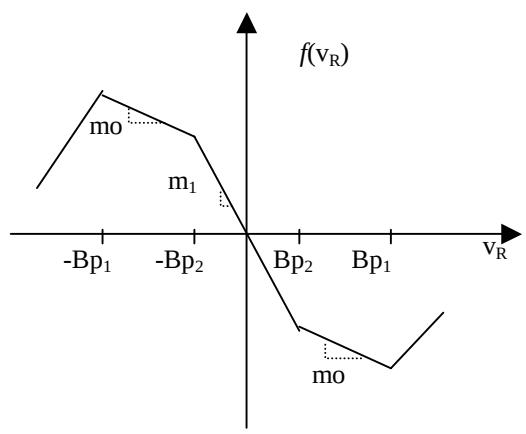

Fig.1(b) Chua's nonlinear function

Design procedure

The values of the two capacitors, inductor and resistor are chosen from the computer simulations confirmed by Matsumoto[8]. E_{sat} is the saturation voltage of the operational amplifier. It is determined by the power supplies and the internal structure of the op amps. The nonlinear resistor consists of two negative resistors connected in parallel. We choose R_1 large enough so that the op amp is not loaded, say around $220\,\Omega$. R_2 is chosen to be equal to R_1 so as to make the analysis simple. The break points (boundary points for the attractor) are calculated such that, the attractor (the state in which the system settles) remains in the negative resistance region (the region in which the current is inversely proportional to the voltage) so that the attractor is bounded. The detail design of the nonlinear resistor is given by Kennedy [9].

Computer simulation results

The realization of the Chua's circuit is shown in Fig 1(c). The constant m_o, m_1, and B_p can be easily computed.

$$\left(m_1 = -\frac{R_2}{R_1 R_3} - \frac{R_5}{R_4 R_6},\ m_0 = -\frac{R_2}{R_1 R_3} + \frac{1}{R_4},\ B_{p_1} = \frac{R_3}{R_2 + R_3} E_{sat},\ B_{p_2} = \frac{R_6}{R_5 + R_6} E_{sat} \right)$$

The complete implementation of the Chua's circuit is shown in Fig. 1(c).

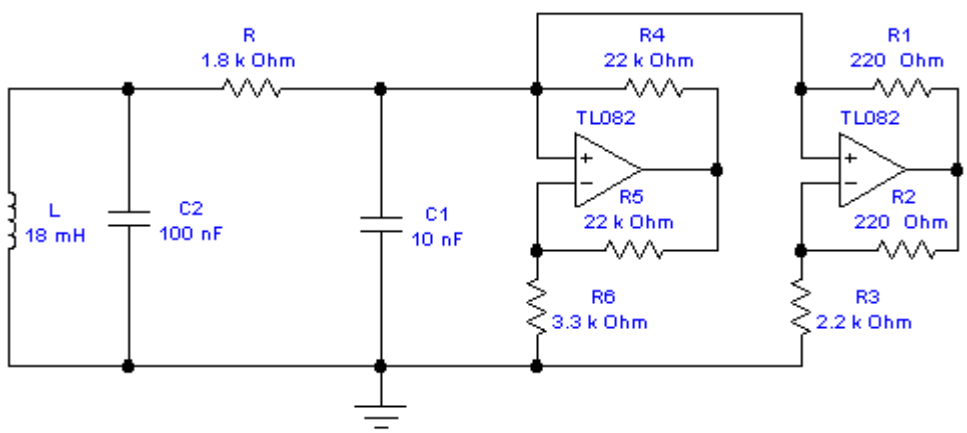

Fig 1(c) The realization of the Chua's circuit [1]

The results of Electronics Workbench simulation show the phase portrait of the probed signals in Fig. 1(d).

Fig. 1(d). Phase portrait Vc_2 versus Vc_1.

Circuit implementation

The Chua's circuit was implemented using the TL082 operational amplifier. The double scroll is shown in Fig. 1(e) and the voltage $v_{c1}(t)$ as well as its spectrum are shown in Fig.1(f). The reader is encouraged to experiment with this circuit by connecting a variable resistor in series with the inductor L.

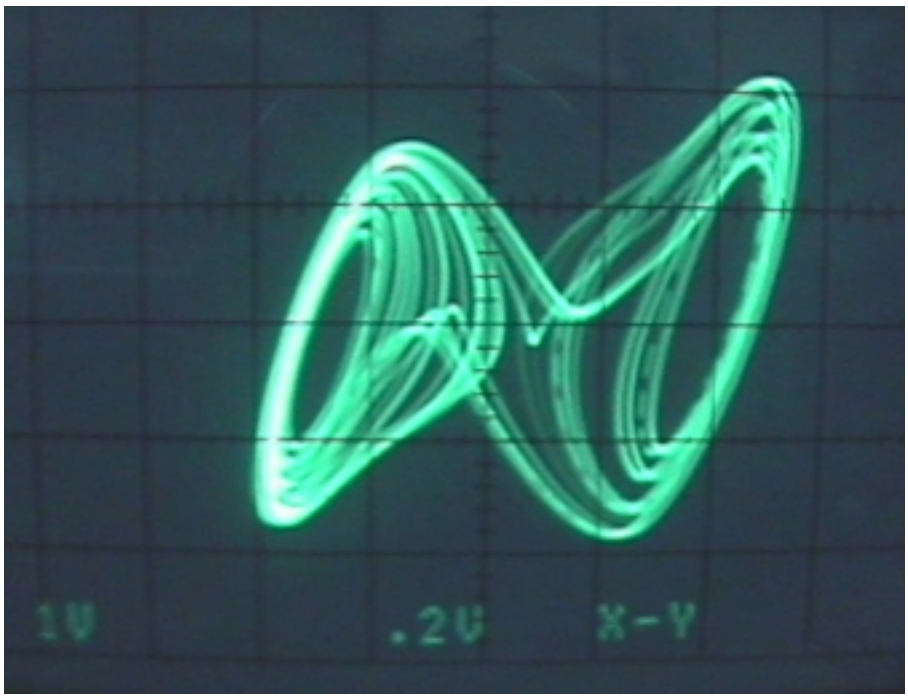

Fig.1(e). Double Scroll Vc2 versus Vc1 for R=1.53KΩ

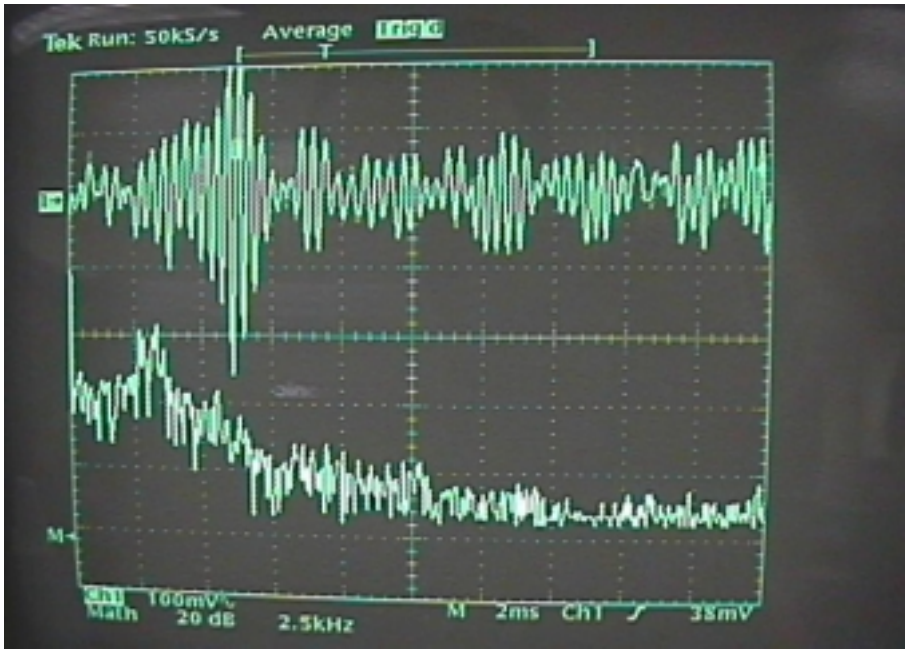

Fig.1(f). Above Waveform: $V_{c1}(t)$.
Below Waveform: Corresponding Spectrum

Applications

One of the important applications of chaos is in secure communication. The block diagram of the communication system is shown in Fig. 2(a). The circuit implementation is shown in Fig. 2(d) and the simulation is shown in Fig. 2(e). One of the problems faced in the implementation of the communication system was that of synchronization. Efforts are in progress to perfectly match the chaotic systems at the transmitter and the receiver.

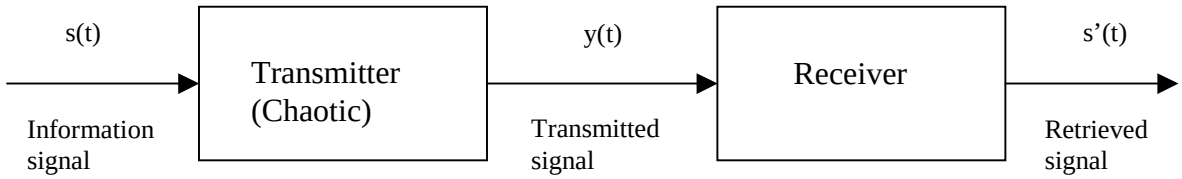

Fig. 2(a) Block Diagram of Communication System

Transmitter

The internal block diagram of the transmitter is shown in Fig. 2(b). The transmitter uses a summer to mask the information signal s(t) with the chaotic signal $V_{c1}(t)$ generated by the chua's circuit to produce the resultant signal r(t). The buffer is used to get signal without attenuation and the inverter is used transmit the resultant signal without any phase shift.

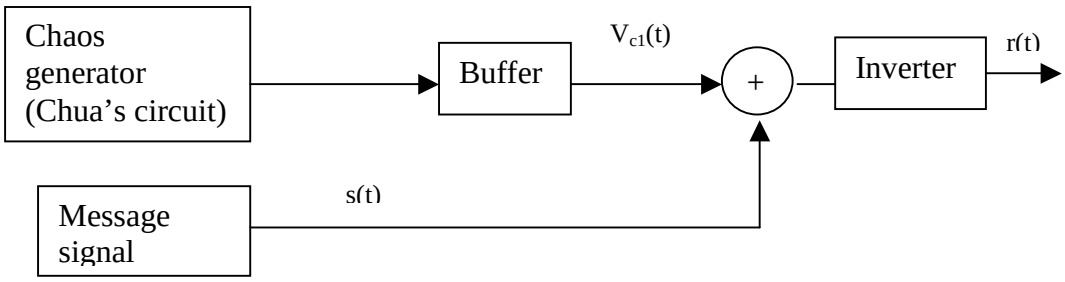

Fig. 2(b) Internal Block Diagram of Transmitter

Receiver

The internal block diagram of the receiver is shown in Fig. 2(c). The receiver consists of a chua's circuit similar to the one at the transmitter to generate a chaotic signal $V_{c1}(t)$ that is perfectly matched with the chaotic signal generated at the transmitter. The signal r(t) from the transmitter and the chaotic signal $V_{c1}(t)$ generated from the receiver chaotic system (chua's circuit) are passed through a subtractor, the output of which is $s'(t) = r(t) - V_{c1}(t)$, which is the same as the message signal. The buffer is used for coupling to make sure that the signal is not attenuated.

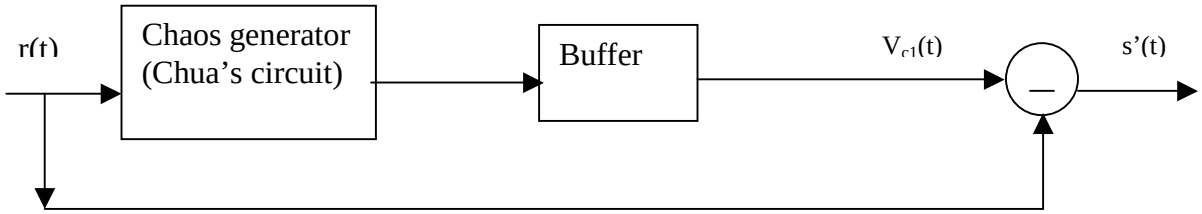

Fig. 2(b) Internal Block Diagram of Receiver

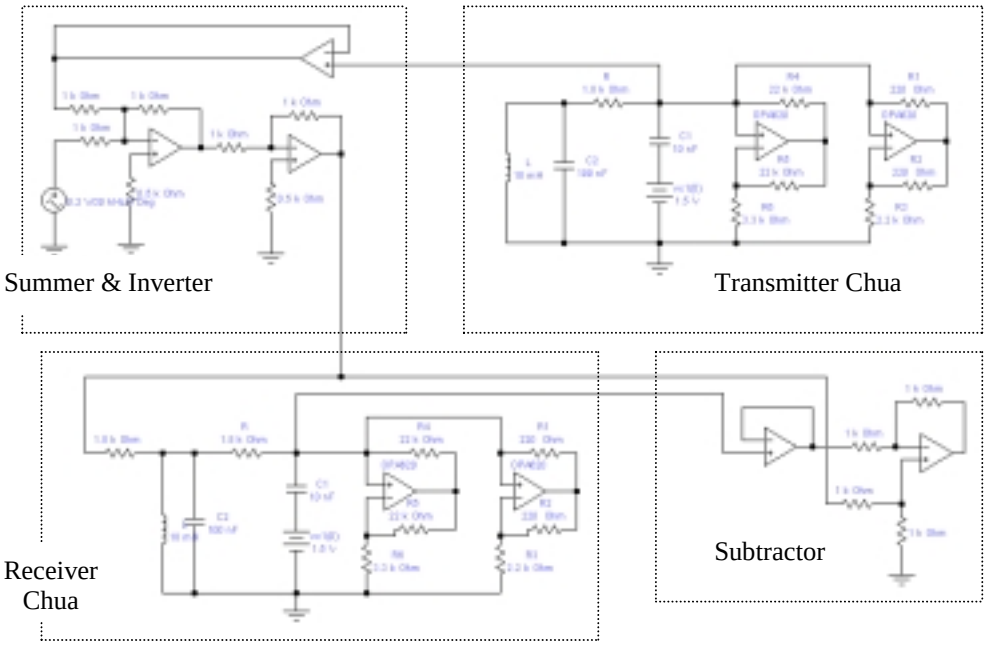

Fig. 2(d) Circuit Implementation of Secure Communication System

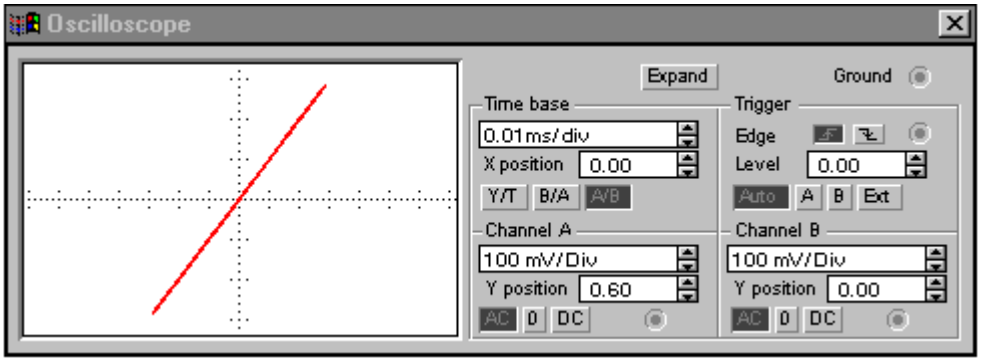

Fig. 2(e) Phase Portrait of s'(t) versus s(t)

Conclusions

The paper introduces the chaotic phenomenon using a simple and popular circuit called chua's circuit. The necessary theoretical background and practical implementation of the chua's circuit is presented in detail. The paper also recommends the introduction of this circuit at the undergraduate course level, considering the increased presence of chaos in many fields of application. Finally, an application of chaos in secure communication is illustrated in brief.

References

1. M.P. Kennedy, "Three Steps to chaos-Part I: Evolution", IEEE Transaction on Circuits and Systems, Vol.40, no.10, pp.640-656, October 1993.
2. L.O. Chua, et Al, "A Universal Circuit for Studying and Generating Chaos -Part I : Routes to Chaos," IEEE Transaction on Circuit and Systems, Vol.40, no10, October 1993, pp.732-744.
3. L.O. Chua, et Al, "A Universal Circuit for Studying and Generating Chaos -Part II : Strange Attractors," IEEE Transaction on Circuit and Systems, Vol.40, no10, October 1993, pp.745-762.
4. K. Murali, M. Lakshmanan and L. O. Chua, "The Simplest Dissipative Nonautonomous Chaotic Circuit", IEEE Transaction on Circuits and Systems – I, Vol.41, no.6, pp. 462-463, June 1994.
5. M. E. Yalcin, J. A. K. Suykens and J. Vandewalle, "Experimental Confirmation of 3 and 5 Scroll Attractors from a Generalized Chua's Circuit", IEEE Transaction on Circuits and Systems – I, Vol.47, no.3, pp. 425-429, March 2000.
6. J. A. K. Suykens and J. Vandewalle, "Generation of *n* Double Scrolls(n = 1, 2, 3, 4,…)", IEEE Transaction on Circuits and Systems – I, Vol.40, no.11, pp.861-867, Nov. 1993.
7. M.Ogozalek, "Taming Chaos, Part I: Synchronization", IEEE Transaction on Circuits and Systems – I, Vol.40, n0.10, pp.693-699, Oct. 1993.
8. T. Matsumoto, L. O. Chua and M. Komuro, "The Double Scroll", IEEE Transactions on Circuits and Systems, CAS-32 (1985) 8, pp 797-818.

9. M.P. Kennedy, “Robust Op Amp Implementation of Chua’s Circuit”, Frequenz Vol.46, no.3-4, pp.66-80, 1992.

MAHESH MULUKUTLA
Mr. Mulukutla is currently a graduate student in the center for advanced computer studies (CACS) at the University of Louisiana at Lafayette. His research interests are in the design and analysis of chaotic circuits, developing software applications and computer networking.

CHERIF AISSI
Dr. Aissi currently serves as an Associate Professor of Electronics in the Industrial Technology Department at the University of Louisiana at Lafayette. His research interests are in the areas of design of microprocessors-based systems, intelligent microcontrollers, analysis of nonlinear dynamics of complex systems and design of chaotic circuits.