ASEE AMERICAN SOCIETY FOR ENGINEERING EDUCATION

Paper ID #35811

Integrated Multi-Sensor Remote System Design for Real-Time Indoor Air Quality Monitoring

Jose Eric Chavez Jr., University of the Incarnate Word

Student at the university of incarnate word, graduating in may of 2022 with a bachelors of science in Mechanical Engineering.

Miss Alyssa Mabry, University of the Incarnate Word

Alumna of the University of the Incarnate Word. Graduated with a Bachelor of Science in Computer Information Systems. Programming specialization.

christian andon, University of the Incarnate Word

Student at the Incarnate Word graduating in December of 2022, with a Bachelors of Science for Cyber Security Systems.

Selena R Salas, University of the Incarnate Word

Attends University of the Incarnate Word, Graduation date of May 2022. To be awarded a Bachelor of Science in Mechatronic Engineering.

Dr. Okan Caglayan, University of the Incarnate Word

Okan Caglayan is an associate professor in the Department of Engineering at the University of the Incarnate Word (UIW). He received his Ph.D. degree in Electrical Engineering from the University of Texas at San Antonio. The scope of his research ranges from developing new techniques in the areas of digital signal processing with pattern recognition applications to building innovative Internet of Things (IoT) and big data analytics frameworks to be implemented in real-time. Prior to joining UIW, Dr. Caglayan worked as an engineering consultant in the Applied Power Division at Southwest Research Institute. In addition, he was a lecturer in the Department of Physics and Astronomy at the University of Texas at San Antonio teaching Engineering Physics with emphasis on electromagnetism, mechanics and optical science.

Dr. James Christopher Collins, University of the Incarnate Word

Dr. Collins began his career by serving four years in the US Air Force as a medic before attending college full time in pursuit of his engineering degrees. He spent 30 years in civil service as a research and development engineer engaged in advanced network security programs for the Department of Defense. At the height of his career, he was the lead for Cyber Warrior training program for the 90th Cyberspace Operations Squadron at Joint Base San Antonio. Dr. Collins teaches cyber security courses at the University of the Incarnate Word in San Antonio, Texas. His current research activities utilize FPGA developed systems to implement high speed cryptographic and steganographic algorithms for real-time network analysis.

©American Society for Engineering Education, 2022

Integrated Multi-Sensor Remote System Design for Real-Time Indoor Air Quality Monitoring

Jose Chavez, Alyssa Mabry, Selena Salas, Christian Andon, Okan Caglayan, Ph.D., James Collins, Ph.D.

Department of Engineering, Computer Information Systems and Cybersecurity
University of the Incarnate Word
San Antonio, TX, USA

Abstract

This paper presents a collaborative senior capstone research experience in developing an integrated multi-sensor remote system design for real-time indoor air quality (IAQ) monitoring to mitigate the risk of seasonal respiratory viral diseases. Studies have revealed the effect of a room's occupancy, temperature, humidity, and carbon dioxide (CO_2) levels on respiratory virus stability and spread. The long-term goal of the proposed collaborative research between Engineering, Computer Information Systems and Cybersecurity students is to provide safe and healthy spaces by acquiring, classifying, and disseminating IAQ data to support their community in making informed decisions on daily actions in entering indoor spaces, such as cafeteria, bookstore, or taking the shuttle on campus. The proposed low-power, portable, low-cost multi-sensor embedded system collects real-time information about air temperature, humidity, occupancy, carbon dioxide levels, processes the information and provides visual alerts via a website. The multi-sensor system was developed and implemented using an Arduino MEGA 2560 for sensor data acquisition and rapid processing, a Raspberry Pi Model 3B+ for sensor data fusion, analysis, and presentation using an integrated Apache web server. The processed IAQ data is displayed on a community website to inform the current conditions of the indoor space with options of safe, unsafe, or should be visited with caution. The entire sensor and processing platform was subjected to a full cybersecurity system vulnerability assessment for risk mitigation to exploitation. This project provided the senior Engineering, Computer Information Systems and Cybersecurity students an invaluable opportunity to apply their existing technical knowledge, improve their time management, communication skills, and work as a team on a real-world problem.

Introduction

The COVID-19 pandemic has changed the way that people perform their daily routines. Many people take no extra precautions to avoid respiratory illnesses and would greatly benefit from a system put in place to alert them of areas with potentially high infection rates. When many people gather within an enclosed space, it will naturally raise the levels of CO_2 within the room. In the past, this wouldn't have been much of a concern. However, the conditions of a room have a lot to do with how easily illness is transmitted via droplets from our breath. Cold and dry indoor places, typically less than 40% humidity and less than 21°C, will allow for infected droplets of breath to linger in the air for

Copyright © 2022, American Society for Engineering Education

longer periods of time, putting passerby at an increased risk of coming into contact with airborne respiratory illnesses[1,2,3,4,5].The aim of this project is to support our community by providing situational awareness of their environment in terms of spaces, such as classrooms, offices, shuttles, etc., by providing real-time data and allowing for informed decisions to mitigate viral spread of respiratory diseases. Figure 1 shows the project overview to describe the steps that we took to achieve our objectives.

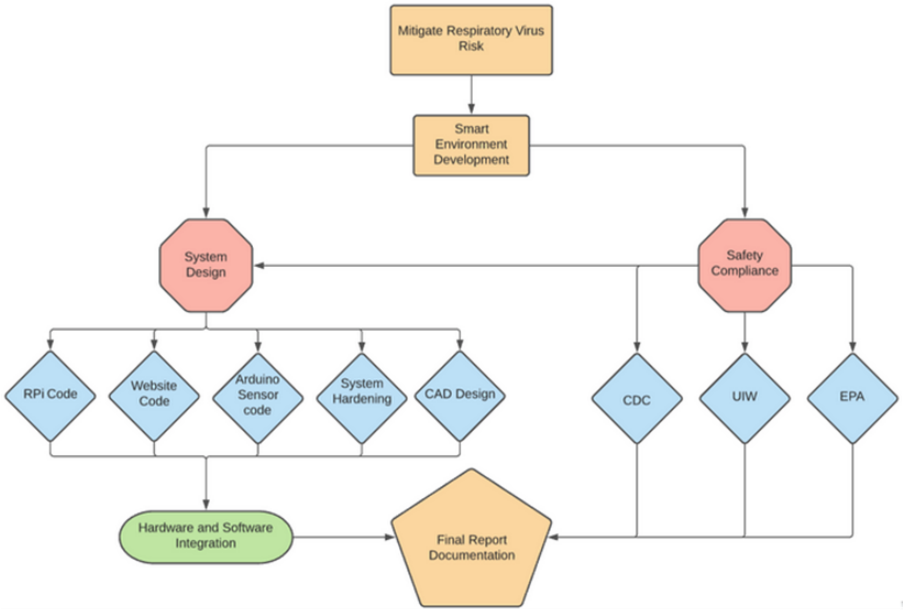

Figure 1. Project Overview

System Design

The system's hardware is composed of a microcomputer (Raspberry Pi 3) and a microcontroller (Arduino Mega 2560). The microcontroller has multiple sensors connected which will provide a real time indoor air quality reading to help with disease mitigation. The Arduino IDE programmed sensors are: DHT11 a temperature and humidity sensor, two HC-SR04 Ultrasonic sensors which work as room occupancy counters, in addition to a buzzer module which will sound if the room has exceeded maximum occupancy, and finally, an MQ2 gas sensor that detects liquefied petroleum gas, smoke, alcohol, propane, hydrogen, methane and carbon dioxide concentrations from the surrounding air. Readings are decoded by Arduino and saved onto the microcomputer's hard drive with the reading's latest timestamp. Lastly, attached to the Raspberry Pi is a small
2400 mAh battery pack which powers the whole system. From Figure 2, we can see the hardware circuit schematic and the connections between the microcomputer, microcontroller, and each sensor.

The system software included Arduino IDE, a modified version of C++, and Python IDLE Version 2. The microcontroller script is composed of 200 lines which includes an occupancy counter, a maximum capacity alarm, continuous temperature and humidity readings along with the singled-out CO_2 reading. The Arduino script organizes all the data collected and communicates via serial port with the Raspberry Pi. The microcomputer Python script is 21 lines of code that saves and records the sensor

Copyright © 2022, American Society for Engineering Education

readings into a designated directory. The stored data is then extracted by a web server and displayed on the HTML site.

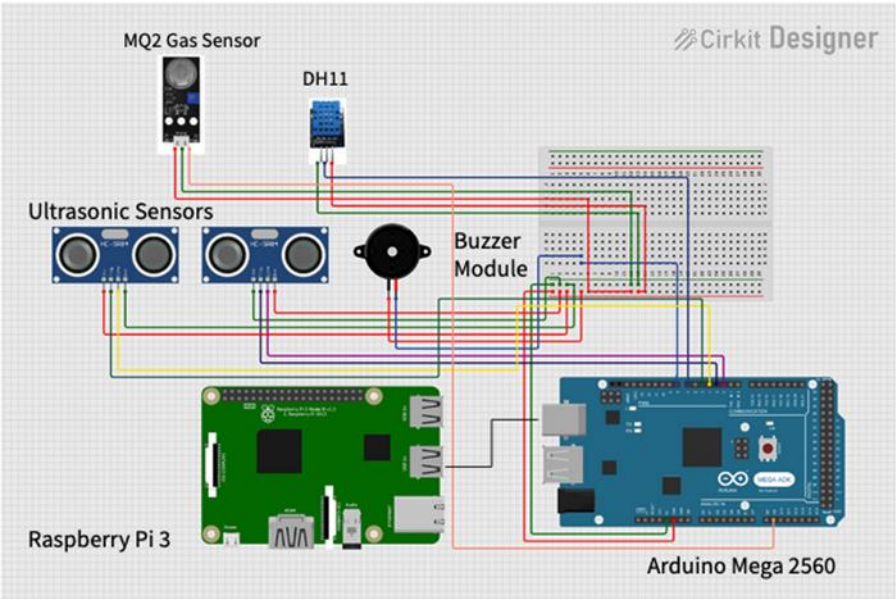

Figure 2. System Circuit Schematic

User Display

The website utilized by this system runs a LAMP (Linux, Apache, MySQL, PHP) server from a dedicated Raspberry Pi 3. This same hardware runs the code required for the data extraction from the sensors connected to the Arduino Mega 2560. The limitation of this locally hosted method is that devices may only access the website if the Raspberry Pi 3 is turned on and it is on the same internet connection as the connecting device. The system site makes use of three site page files utilizing HyperText Markup Language (HTML5) and Hypertext Preprocessor (PHP), one Cascading Style Sheets (CSS) file, and one plain text file within its Apache web directory folder. The index page of the site displays the data output provided by the sensors on the Arduino Mega 2560. Utilizing an array in the page code that stores temperature, humidity, carbon dioxide level, and current capacity in separate indexes, these data points are then stored and displayed in their appropriate columns to the user. The level of carbon dioxide is the primary factor in deciding what safety level the page's status bar should display; a red status box indicates unsafe levels above 100 ppm, a yellow status box indicates moderate levels of 51 to 100 ppm, and a green status box indicates safe levels of 50ppm and below.

Designing the 3-D Printed Enclosure for the Device

The system enclosure was designed in AutoCAD (Figure 3a) and printed in a MakerBot 3D printer, the material being a clear blue PLA filament. The design breaks into eight prints, leaving one side open for the viewers to see the hardware within. The case was specifically created to suit the sensors, to mark the surrounding gas, temperature and humidity the design included breathable side vents. In

Copyright © 2022, American Society for Engineering Education

addition, the case has four open apertures on the front face to have ultrasonic sensors marking occupancy (Figure 3b). The system with its case must be placed at the entrance of a room or designated enclosed space.

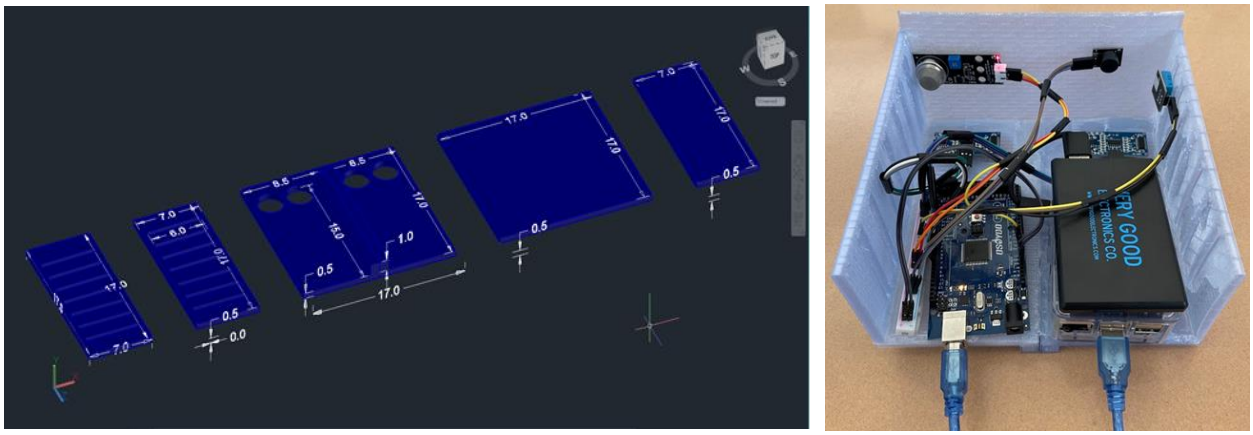

Figure 3. a) AutoCAD final design, b) 3-D Printed Enclosure

System Security

Physical security was proposed by including visual warning signs and mounting options based on surveying the location in a classroom, office, etc. The system's cyber security was addressed through hardening reports and penetration testing. The procedures regarding penetration testing were as follows: given that the person would need to know how to find the device, find any open ports, and how to fix the issues. Tools would also be needed to make sure that it is possible to go through the process. The tools used consisted of Wireshark, Nmap, and Wapiti. In the beginning, it would be easy to find the IP address as an inside person, as you could just ask for it. However, in this case, the intruder could use a certain tool to find the IP address. Wireshark is a free tool application that is used to capture packets from network connections. By using the application, it is possible to capture the packets from the device's network connection to get the IP address of the device. After managing to capture some packets, one would need to look through them to find out if it came from the same location as the device is located at. Upon discovery of the IP address as you look it up, with certain IP address lookups sites, it would indicate if that were the address you are looking for. Once there is confirmation, the next process is set in the next phase of testing.

Conclusion

The purpose of this collaborative senior capstone project was to provide safe and healthy spaces by acquiring, classifying, and disseminating IAQ data to support their community in making informed decisions on daily actions in entering indoor spaces, such as cafeteria, bookstore, or taking the shuttle on campus. This project provided the senior Engineering, Computer Information Systems and Cybersecurity students an invaluable opportunity to apply their existing technical knowledge, improve their time management, communication skills, and work as a team on a real-world problem.

Lessons Learned

Copyright © 2022, American Society for Engineering Education

From the start of the project, the team proposed a six-phase project plan. Phase 1 consisted of scheduling future meetings and drafting the proposal, during which time we began sharpening our skills in time management and task delegation as a team. Phase 2 consisted of proposing and developing our multi-sensor system design. We learned many interesting skills during this portion of the project, including how to run a 3D printer and incorporate sensors onto system hardware. Phase 3 consisted of our midpoint progress checks and presentation, during which time we further harnessed our skills in time management and proper formatting of technical projects such as this one. Phase 4 consisted of the implementation of our hardware and software. It was during this phase that really tested our skills in troubleshooting multiple issues. As a result, we learned how to better utilize our problem-solving skills and come up with creative solutions to errors in code and with printing. Phase 5 consisted of the finalization and polishing stages of our project. By this phase of the project, we had completed the base coding and design, which meant that most of our time was spent learning and implementing ways our design could be better within the remaining time for completion. It helped us assess scope of implementation and further hone our time management skills. Phase 6 was the final phase of the project consisting of our final report and presentation. As a future work, the authors will be investigating the improvements to the current system by adding additional sensors to the hardware, such as a Wi-Fi module for shuttle tracking, and developing machine learning algorithms at the software level.

References

1. Association, N. E. (n.d.). Safety considerations for the transportation of students during COVID-19 crisis. NEA. Retrieved October 11, 2021, from http://www.nea.org/professional-excellence/student-engagement/tools-tips/safety-considerations-transportation-students.
2. Centers for Disease Control and Prevention. (n.d.). CDC Transportation Recommendations. Centers for Disease Control and Prevention. Retrieved October 11, 2021, from http://www.cdc.gov/transportation/recommendation.htm
3. Centers for Disease Control and Prevention. (n.d.). Covid Data Tracker Weekly Review. Centers for Disease Control and Prevention. Retrieved October 11, 2021, from http://www.cdc.gov/coronavirus/2019-ncov/covid-data/covidview/index.html
4. Centers for Disease Control and Prevention. (n.d.). Covid-19 employer information for bus transit operators. Centers for Disease Control and Prevention, (Retrieved October 11, 2021) http://www.cdc.gov/coronavirus/2019-ncov/community/organizations/bus-transit-operator.html
5. Communications, N. Y. U. W. (n.d.). Covid-19 transportation updates. NYU. Retrieved (October 11, 2021), https://www.nyu.edu/life/travel-and-transportation/university-transportation/covid-19-transportation-updates.html
6. Mecenas, P., Bastos, R. T. da R. M., Vallinoto, A. C. R., & Normando, D. (2020), "Effects of temperature and humidity on the spread of covid-19: A systematic review", PloS One, (Retrieved October 11, 2021), http://www.ncbi.nlm.nih.gov/pmc/articles/PMC7500589/.
7. Github Repository for Project Aether, Python Script: https://github.com/Jos3ric/aether/blob/03ee2ca3e2f26a30c44c3fc7c56985ef60cecb23/PYTHONFINAL

Copyright © 2022, American Society for Engineering Education