Paper ID #18869

# Integrating Reverse Engineering and 3D Printing for the Manufacturing Process

**Dr. Akbar M. Eslami, Elizabeth City State University**

Dr. Akbar Eslami is a professor and Engineering Technology coordinator in the Department of Technology at Elizabeth City State University. He received his Ph.D. in Mechanical Engineering from Old Dominion University. His research interests are in Computer Aided Manufacturing and Design, Reverse Engineering, Finite Element Analysis, Computational Methods, and Data Acquisition.

# Integrating Reverse Engineering and 3D Printing for the Manufacturing Process


## Abstract

The objective of this project is to utilize the reverse engineering process to scan and transform the geometry of a part of an airplane wing into a useful three-dimensional (3D) computer model platform that can be sent to either a 3D printer or Computer Numerical Control (CNC) machine and turned into an actual physical part. Also, the computer model is converted to a 3D Computer Aided Design (CAD) model in order to perform stress analysis on it and validate the reliability of the part in real world conditions. The process includes utilizing a Faro Arm laser scanner, Geomagic reverse engineering software, Stratasys 3D printer, SolidWorks simulation software, and Mastercam Computer Aided Manufacturing (CAM) software. The laser scanner and reverse engineering software create a 3D computer model of the part which is used as the basic model for the manufacturing process. In addition, the 3D printer is utilized to create a prototype of the part to ensure the manufacturability of the part early in the design phase. Furthermore, SolidWorks simulation software is used for performing stress analysis and making recommendations to improve the reliability of the part. The stress and deformation distributions data are assessed to determine how the part can properly handle the stresses when it encounters in real world circumstances. Finally, Mastercam for SolidWorks software is utilized to generate a G-code for the purpose of manufacturing the part by a CNC machine.


## Introduction

The reverse engineering arm/3D scanner and 3D printer are very popular in many sectors of industry including military, NASA, healthcare, and education, according to numerous reports[1]. The Society of Manufacturing Engineering (SME) defines reverse engineering as the process of taking a finished product and reconstructing design data in a format from which new parts or molds can be produced. With the advancement in technology, today reverse engineering techniques can be utilized to scan and transform the geometry of an outdated part into a useful 3D computer model platform that can be sent to a 3D printer and turned into actual physical part. Also, it can be used to redesign a part, and inspect geometry, as well as validate measurements of the part. The reverse engineering arm/3D scanner has a wide range of applications in various industries and the Department of Defense (DoD) including production of flight simulator ejection seats[2], creation of CAD model of engine parts, repair and maintenance of airborne vehicles[3], and to provide the highest level of accuracy and quality in the manufacturing, particularly engine blades[4].

Additive manufacturing, more popularly known as 3D printing, describes a group of technologies used to produce objects through the addition rather than the removal of material. It refers to a process that automatically builds objects layer-by-layer from computer data[5-6]. Additive manufacturing/3D printing is being referred to as the next industrial revolution. Design engineers need a physical prototype to validate form, fit and function, and to get approval on design changes prior to mass manufacturing. Also, 3D printing can help bring material products to market faster. Additive manufacturing/3D printing is being applied in a diverse range of industries. Applications are found in aerospace, automotive, medical, electronics, and defense. The Air Force research laboratory has used 3D printing to fabricate the GRIN lens with an operational frequency of 12 GHz[7]. Also, 3D printing is used to fabricate an aluminum rocket

engine injector to improve performance, reliability, and the affordability of the liquid propellant rocket engine[8]. The International Space Station's 3D printer has manufactured the first 3D printed object in space[9]. In addition, the DoD tested printing drones while at sea on board the USS Essex ship[10]. Digital plans of drones were transmitted by satellite link, and fed into the 3D printer by sailors. The crew then took the printed parts and assembled them, including electronic parts already on board. Furthermore, aerospace companies turn to additive manufacturing to make lighter parts at a lower cost to reduce the weight[11-12].

**Methodology**

The process of generating a 3D computer model and converting it to a CAD model for the manufacturing process is described below. The process starts with utilizing the laser scanner efficiently and accurately for scanning the part and creating point clouds to generate a 3D computer model of the part within the Geomagic software program. Figures 1-6 show the original part, process of scanning the part, creating point clouds, and finally creating a computer model.

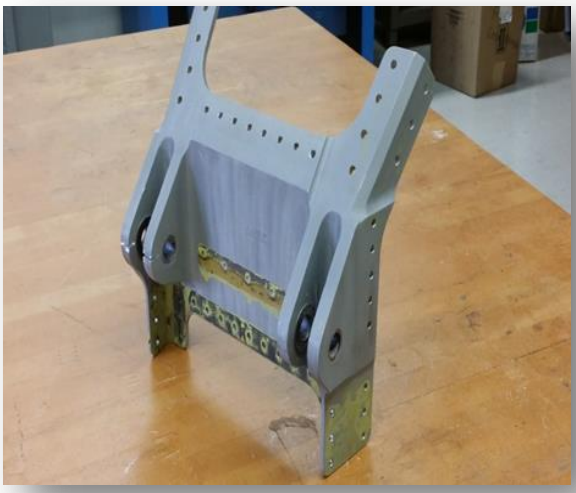

Fig 1. Original Part

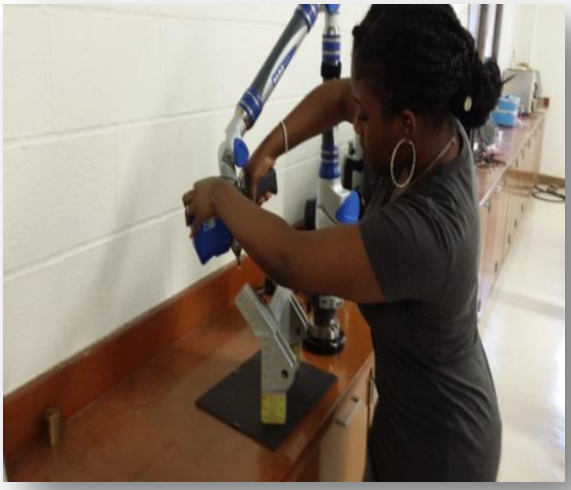

Fig 2. Scanning the Part

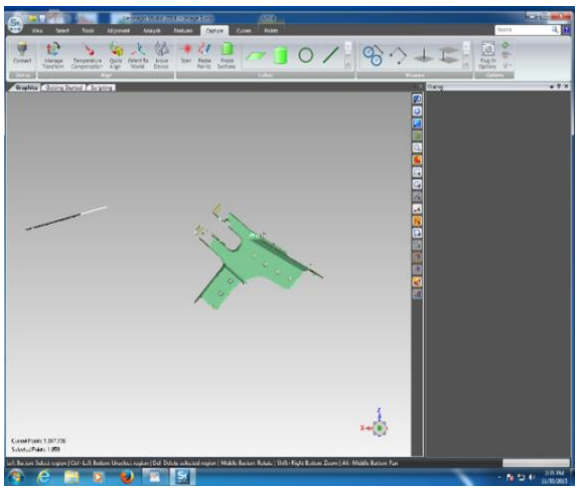

Fig 3.  Point Clouds of Side Section

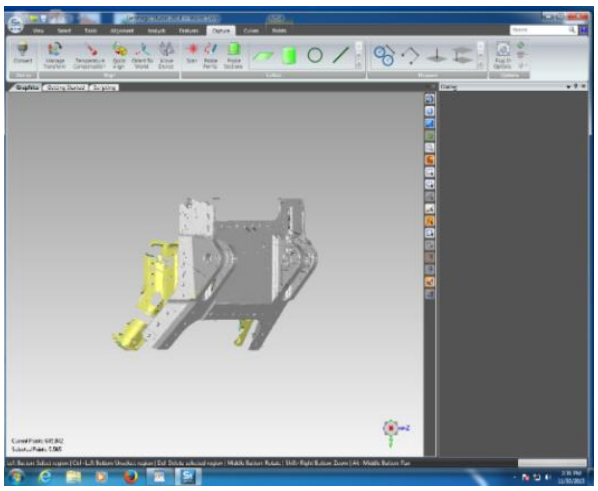

Fig 4. Point Clouds of Front Section

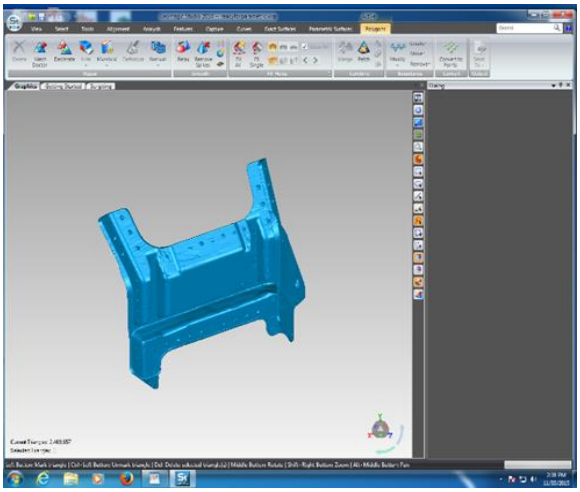

Fig 5. Computer Model- Back of the Part

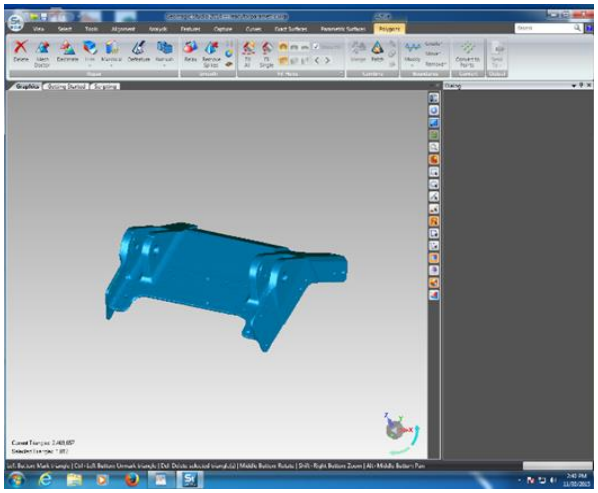

Fig 6. Computer Model-Bottom of the Part

After scanning and completing a computer model, the next step is to convert it to a CAD model. The Geomagic software has features that deliver robust 3D scan data into CAD-based design. Those features that include parametric exchange, paramedic surfaces, polygon mesh, datums and curves are utilized to align the surfaces and transfer point clouds to 3D CAD software. Figures 7 and 8 show the computer model or point data converted to a CAD model within SolidWorks software.

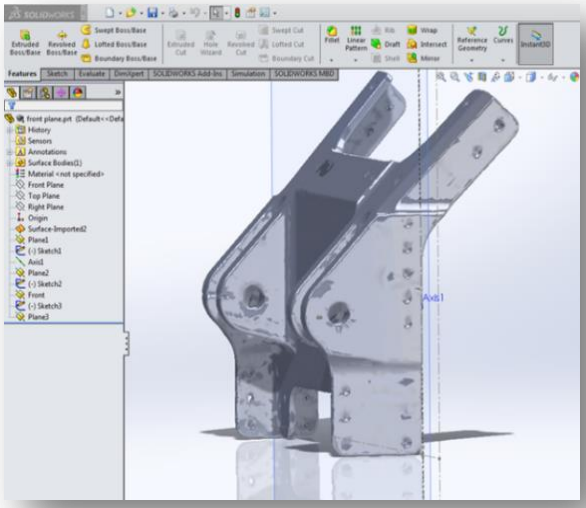

Fig 7. Preliminary Conversion to CAD Model

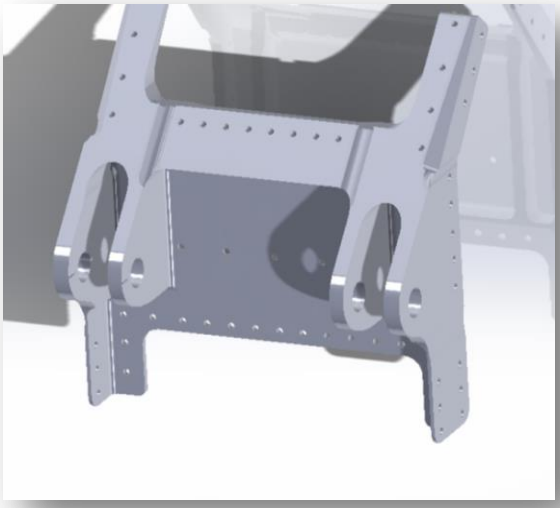

Fig 8. Final Conversion to CAD Model

Prior to manufacturing the part, the SolidWorks simulation software is utilized to analyze and modify the geometry of the part in order to meet the desired design. After defining material properties and structural boundary conditions for the model, the analysis of the part starts. The 3D tetrahedral solid elements are used for meshing solid geometry. The meshing process and modeling are given in figures 9 and 10. The deformation and Von Mises stress distributions are depicted in figures 11 and 12, respectively. The Von Mises stress value allows the most complicated stress situation to be represented by a single quantity. It refers to a theory called the "Von Mises - Hencky criterion for ductile failure". The Von Mises equation is given by:

$$(S1-S2)^2 + (S2-S3)^2 + (S3-S1)^2 = 2Se^2$$

Where S1, S2 and S3 are the principal stresses and Se is the equivalent stress, or "Von Mises Stress."

The stress analysis indicates that the part can handle the desired amount of stress in working conditions.

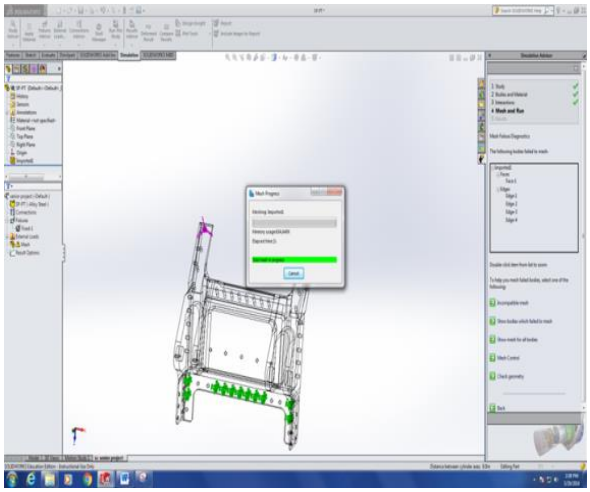

Fig 9.  Beginning of Meshing Process

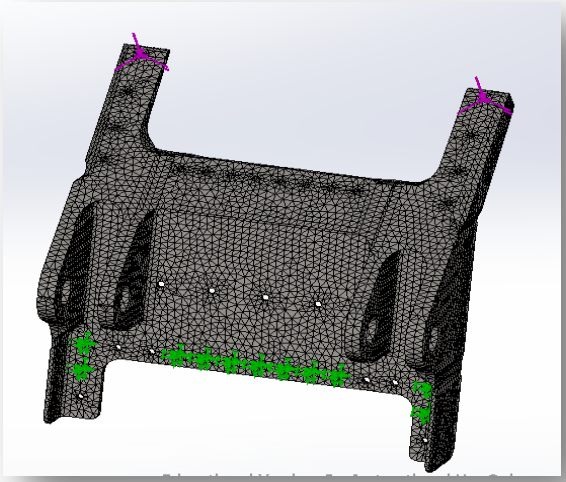

Fig 10. Completed Meshing Process

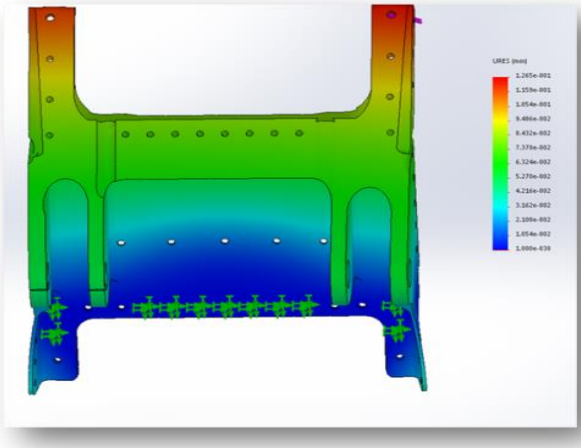

Fig 11. Displacement Distribution on the Part

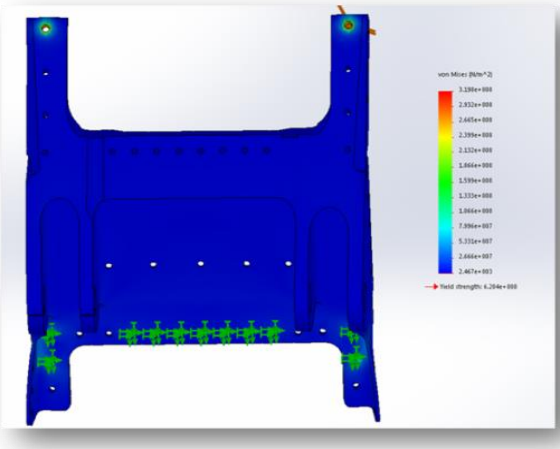

Fig 12. Stress Distribution on the Part

Additive manufacturing/ 3D printing technology is, in turn, used to create a prototype of the part in a smaller size prior to mass production of the part for design improvement. For the sake of convenience and to save the raw materials, the prototype size is reduced by 50 percent from the original size. For the aerospace industry, additive manufacturing is a viable and affordable process to manufacture complex parts that also holds the promise of helping researchers to reduce costs and weight for a variety of applications. Figures 13 and 14 show the process of printing the model in a 3D printer and the printed prototype is compared to the original part.

Fig 13. Prototyping Process

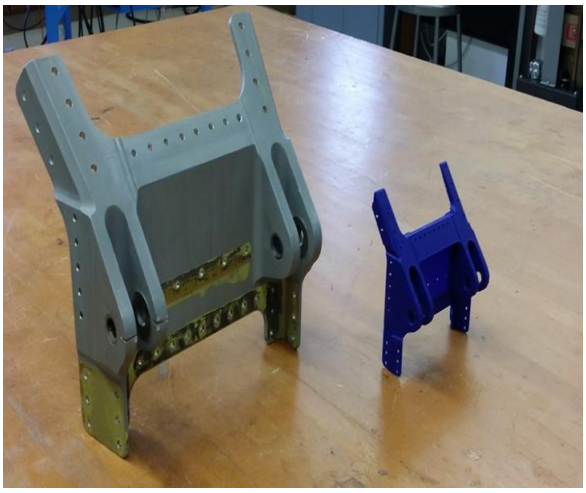

Fig 14. Printed Prototype

Finally, the Mastercam for SolidWorks software is exploited to generate the G-code for machining the part by a CNC machine. Mastercam is a CAD/CAM software that allows for importing CAD data, drawing geometry, and creating automated toolpath operations so that a CNC machine can manufacture the part. The process has three steps including selecting tools and surfaces, creating toolpaths, and simulation. A ¾ Spot Drill to drill the holes, a ½ flat End Mill to create the surface curves, and a ¾ Chamfer Drill is selected to create the corner cuts. Due to some technical issues and the complexity of the part including machining the front and back of the part, a sole G-code for the entire part was not created successfully. The solution was to cut the part to two pieces and generate two G-codes for them separately. Simulation starts after specifying the type of drills needed and giving toolpath instructions. Figures 15-18 show the process of simulating and generating a G-code for the bottom of the part including toolpath that is instructed to perform machining the part. The generated G-code includes over 16000 lines that contain codes for drilling holes, cutting surfaces and curves, and chamfers.

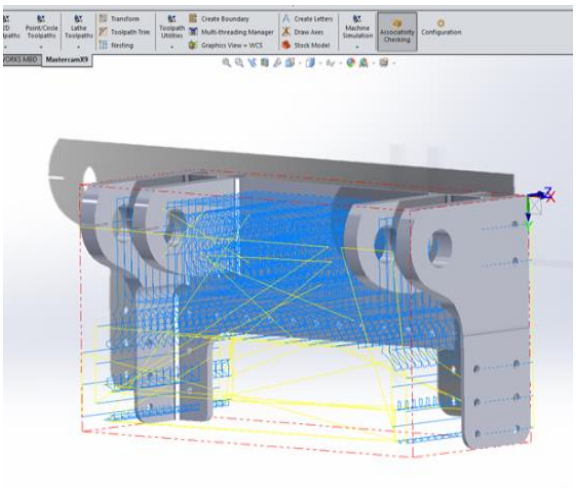

Fig 15. Toolpath Instructions

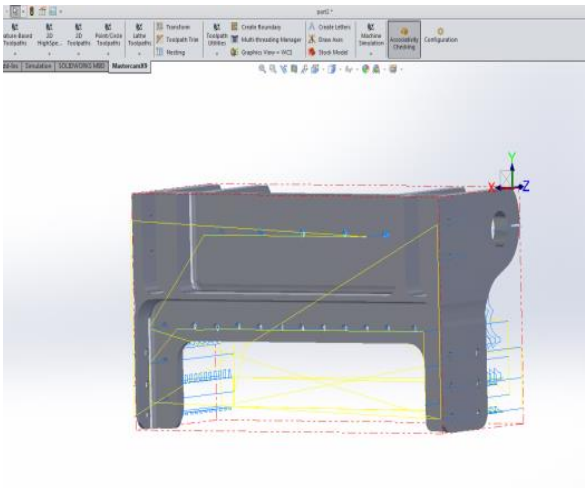

Fig 16. Toolpath Instructions

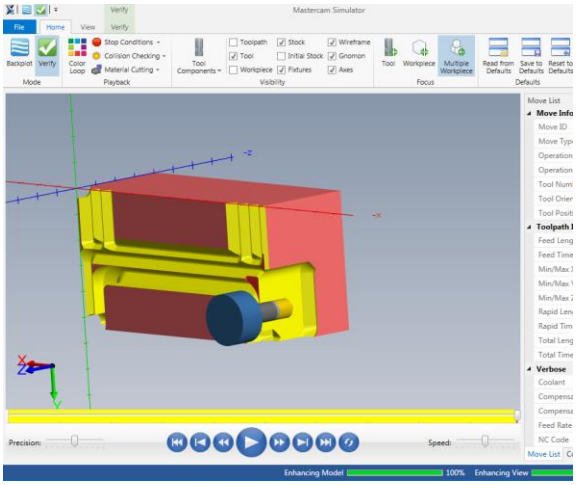


Fig 17. Simulation of the Part

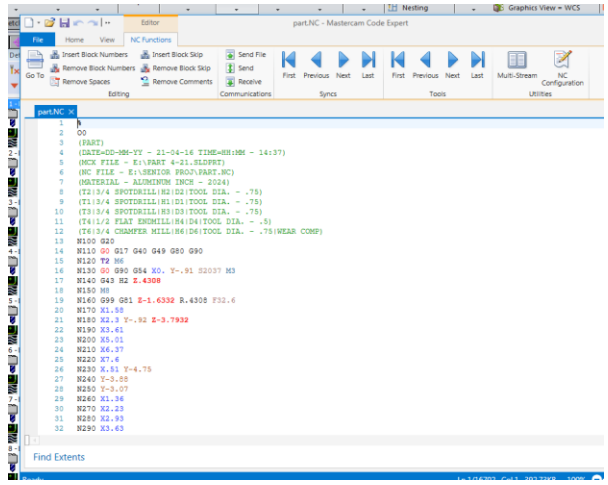


Fig 18. Generating a G-Code

## Project Outcome Assessment

The engineering fields have responded with the ABET engineering accreditation criteria that emphasize the need to systematically monitor, validate, and subsequently improve the learning outcomes that students receive in their course of study. Many universities use direct assessment instruments such as written exams, oral exams, embedded questions in exams, certification exams, and other instruments. Traditional teacher-constructed tests and standardized tests yield information about student knowledge and performance. Alternative forms of assessment, such as this constructive project, can be used as a capstone project to validate student outcomes. It may also be expanded to examine student development and progress in creativity, design, problem solving, trouble shooting, and approaches in handling real world projects.

In this performance assessment project, students were observed while working with complex tasks associated with a real world project. The project afforded students an opportunity to put into practice many of the competencies learned in their field of study including their ability to utilize modern tools, analyze experiments, apply experimental results to improve processes and design, and their ability to select appropriate software simulations, and interpret the results. A team of faculty members utilized a matrix rubric to validate students' competencies in the areas of technical knowledge, problem solving skills, writing, oral presentations, and team work.

## Conclusion and Future Work

To improve efficiency and reliability, industries explore various methods of manufacturing to optimize production in terms of time and cost. This project focuses on the integration of reverse engineering practices, 3D printing, and CNC machines for manufacturing processes. There are several advantages of using the proposed reverse engineering method over other systems. One of the advantages is that no Sicker Targets are required for registration. Also, the Faro Arm has internal temperature compensation. This allows the Faro Arm to automatically adjust for temperature changes during the measurement process. In addition, the proposed method

generates either STL or point cloud output. However, in many instances, it may lose small details if it goes directly into a STL file. The project proves that the proposed reverse engineering process is a reliable and efficient method for transferring the geometry of an outdated part into a useful 3D computer model. Utilizing reverse engineering software is a key aspect in the industry of manufacturing as it is purpose-built to create manufacturing-ready CAD models directly from scan data. Scanning and capturing the physical part in 3D directly inside SolidWorks or other CAD software is recommended for future work. Also, generating a single G-code by PC-based CAD/CAM software is recommended as well.

Bibliography


1. A. Eslami *"Computer Digital Image Processing in Quality Inspection- Reverse Engineering Approach,"* Proceedings of the 2011 American Society for Engineering Education (ASEE), Annual Conference and Exposition, June, 2011, Canada

2. *" Laser Scanner from NVision Reduces Cost to Produce Flight Simulator Ejection Seats,"* http://www.nvision3d.com/success-stories/nvision-fain.html

3. *"Mission Support Inc. Overhauls U.S. air Force B-52s using the FaroARM,"* www. Faro.com

4. *"Blade Inspection and Repair,"* Aerospace Manufacturing and Design Magazine, Oct 2012, Page 82.

5. *"3D Printing: A new Mindset in Product Design,"* NASA Tech Briefs Magazine, Mar. 2013, page16.

6. *"3D Printing's New Materials,"* Desktop Engineering Magazine. Nov 2014, Page 53.

7. *"Design and Fabrication of a Radio Frequency Grin Lens Using 3D Printing,"* Aerospace & Defense Technology Magazine, June 2014 , page 44

8. "*Aluminum Rocket Engine Injector Fabricated 3D Additive Manufacturing*," NASA Tech Briefs Magazine, June 2015, page44.

9. *"3D Printer Creates First Object in Space,"* NASA Tech Briefs Magazine, Jan. 2015, page8.

10. "*The US Navy is Test Printing Drones at Sea,"* Desktop Engineering Magazine, Sep.2015, Page 12.

11. "*3D Printing Takes Off*," Desktop Engineering Magazine. Jan. 2015, Page 22.

12. "*3D Printing Helps Launch Satellite Mission*," Desktop Engineering Magazine. Feb. 2015, Page 29.