2006-1652: INTRODUCTION OF EMERGING TECHNOLOGIES IN MECHANICS OF MATERIALS

Honghui Yu, The City College of New York

Feridun Delale, The City College of New York

Introduction of Emerging Technologies in Mechanics of Materials

Abstract

Though technologies have advanced dramatically in the last century and *Mechanics of Materials*(MoM) has found more applications in many new technologies, the MoM curriculum has been fixed for decades. This paper presents our efforts in keeping MOM curriculum current with the times by incorporating examples from emerging technologies and everyday life.

To fill the gap between the real life and idealized model problems, which were usually well set-up using simple symbols representing load conditions and the objects under study, we added the teaching of modeling process through many examples as they appear in the real world. Students learn how to grasp the fundamental aspects of real problems, make reasonable assumptions, and reduce these examples into solvable mechanics problems. Because residual stress is a pervasive issue in Very Large Scale Integrated Circuits, which are usually composite structures, we expanded the teaching of thermal stresses and included examples such as thermal stresses in composite rods, thin films, solder joints in printing circuit boards, and bi-metallic strips. To increase student awareness of the application of MoM in emerging technologies, several examples of beams in Micro-Electro-Mechanical-Systems (MEMS) were analyzed and illustrated.

Besides content update, we also made some changes in teaching methods. Since the course has no laboratory component, we adopted four simple home experiments to enhance the understanding of basic concepts. In the classroom we demonstrate beam bending, column buckling, and torsion of a tube etc. Also, some time was allocated for students to solve problems after the instructor had solved a similar one. With help from the instructor and their peers, students can identify their deficiencies, clear some misconceptions and grasp the content more effectively.

From surveys conducted for the course and instructor evaluation, student feedback appears to be very positive.

Introduction

Mechanics of Materials (MoM) is the first course in solid mechanics, which covers stress, deformation and strength of simple shaped members, and their applications. Topics include concepts of stress and strain, uni-axial loading, torsion, beam bending, column buckling and stress/strain transformation, etc. As a mandatory course, it has far reaching effects in students' future learning and career development.

Since the introduction of Timoshenko's book, [1] *Strength of Materials*, the subject has become so well defined that the content and coverage of the course have been almost

fixed for many decades. Most of the textbooks are similar. On the other hand, due to the advancement of technology, MoM has found many new applications. Mechanical engineering students are having more and more employment opportunities in emerging technologies other than conventional industries such as automobile companies. There is a need to expose students to many applications of MoM in real life especially in emerging technologies.

The work reported in this article is part of the department's effort in incorporating emerging technologies into undergraduate curriculum, which is supported by a grant from the National Science Foundation. For this particular course, the modifications were made based on the consideration of the following ABET program outcomes:

- An ability to apply knowledge of mathematics, science and engineering;
- An ability to identify, formulate and solve real world engineering problems;
- An ability to use the techniques, skills, and modern engineering tools necessary for engineering;
- An ability to communicate concepts, ideas, and results effectively with appropriate technical skills, including verbal, written, computer graphics or other information technology.

One of the difficulties is the limited instruction time. As a one-semester fundamental course, all the existing topics covered are indispensable. Therefore, the basic principle of the reform is to keep all the basic topics intact while replacing many old examples by new ones from real life and emerging technologies. These new examples are used to illustrate basic concepts, to give a broad view on the applications of the course, especially in modern technologies, to make the course more interesting, to provide working knowledge in emerging technologies and more importantly, and to cultivate the ability of modeling, formulating and solving real world engineering problems.

Based on these considerations, we added more examples of applications of MoM in the real world, expanded the content of thermal stress into one special topic, adopted several simple experiments to be carried out by students at home, and introduced several applications of beams in Micro-Electro-Mechanical Systems(MEMS). Besides content, some changes were also made in the teaching methods.

Using Real World Examples to Learn the Modeling Process

Traditional textbooks on Mechanics of Materials, such as the one by Beer et al.[2] usually have very nicely set homework problems and examples. For example, a straight bar and some simple symbols at its ends represent a beam under certain load conditions. The advantage of these problems is that the student can directly apply newly learned concepts or techniques while not being distracted by other factors, which could be important but do not directly relate to the key concepts focused at the time. However, if all the problems were presented in this way, in their minds, students might gradually form simple impression of beam as what we draw on the paper and cannot realize or identify that ski boards under a skier's feet are also beams, a person standing on a ladder is a beam problem etc. Some MoM textbooks, such as the one by Hibbeler, [3] have many

examples presented in the way as they are in the real world. Many of these problems were adopted in our class either as examples or as homework problems. Our purpose is not simply to solve these mechanics problems, but to teach *explicitly* the process of modeling, formulating and solving a real problem.

For example, the two problems in Fig.1(a) [2] and (b) are identical from the mechanics point of view. Fig. 1b is the symbolic representation of Fig. 1a. Most of the problems in MoM textbooks are presented as in Fig. 1b. The process of going from Fig. 1(a) to Fig.1(b) is usually ignored in the classroom, although it is a very essential part of engineering education. The effort we made in the classroom was to explicitly show the differences between the two, let the students be aware of the difference, and help them work through the whole process of transforming a real world object into a symbolic representation with geometric constraints and mechanical loadings, then solve the problem.

For this example, we take the canoe as the object whose loading conditions need to be studied by drawing the free body diagram. We look at its shape and deduce that the simple beam theory is applicable. We find that the weight of the canoe is balanced by part of the distributed buoyant force and will not induce canoe bending, thus the person's weight can be treated as a concentrated force and the distributed force *w* in Fig. 1(b) is just the part of the buoyant force that balances the person's weight. Once Fig. 1(b) is drawn, solving the problem is not quite difficult for most students. The problem can become even more interesting if we let the person sit a little off from the center. We can guide the student to come up with the conclusion that the distributed load due to buoyant force will vary linearly along the length direction of the canoe.

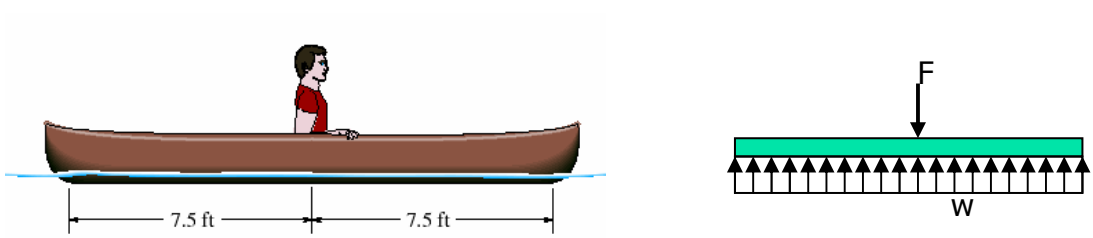

(a) (b)

Fig. 1 a) A person sitting in a canoe [2]; b) The symbolic representation of (a).

We included many practical applications as sample problems in class and also in homework, such as the stress analysis of a water tube, a nut and a wrench when the wrench is tightening the nut on the water tube, of a traffic light pole, of pliers, and of a helicopter propeller shaft, etc. The modeling details are omitted here because we have many examples like these and our intention here is to present the idea, to point out the deficiencies in current mechanics education and to fill the gap between model problems and reality. Through modeling practice, students are exposed to the applications of theory in the real world, and most importantly, they learn how to make reasonable

assumptions to simplify a problem, link the real world to the theory, solve the problem, and design for strength.

Enhancement of Thermal Stress Instruction

The structures in modern technologies are usually made of different materials. For example, any Very Large Scale Integrated (VLSI) structure has metal conductor, semiconductor and glass insulator. For such composite structure, thermal stress is a pervasive issue due to temperature difference among the on/off states of power and during the manufacturing process. In the past, thermal stress was only briefly mentioned after uniaxial loading was introduced. To help students realize and understand many mechanical problems in emerging technologies, we feel that there is a need to enhance the content of thermal stress in the course.

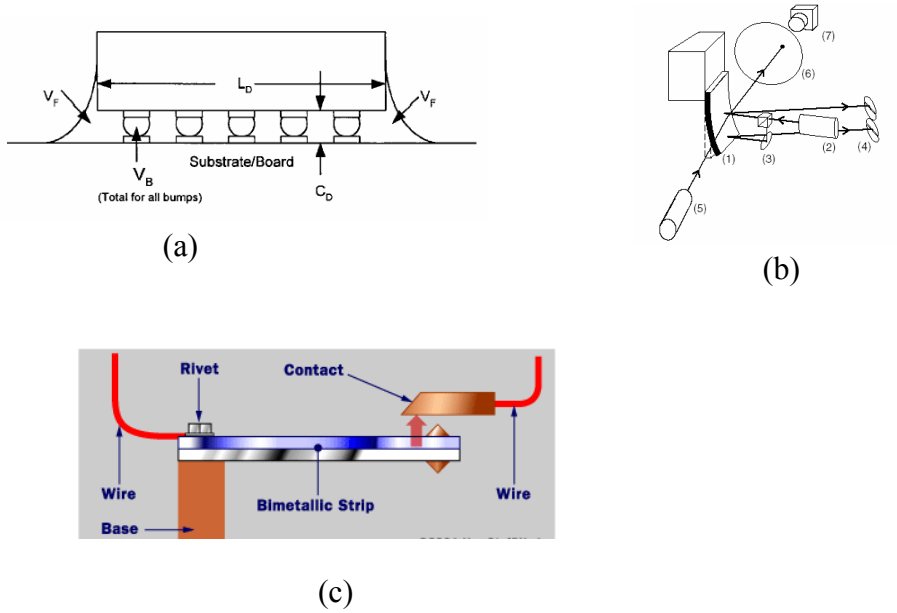

Fig.2 a) Solder joints in Flip-chip technology[4]; b) Wafer bending due to residual stress;[5] and c) Bi-metallic strip as switch or temperature sensor.[6]

Besides the existing examples of thermal stresses in a rod with fixed ends and in a composite cylindrical bar, we added more examples such as thermal stresses and fatigue of solder joints in the flip chip technology(Fig. 2a), and thermal stresses in thin films(Fig. 2b). For the problem in Fig. 2a, we consider the worse scenario, a solder ball under one edge of the chip. If the temperature changes ΔT from the stress-free bonding temperature, the horizontal displacement difference between the top and bottom surfaces of the solder ball is about $\Delta\alpha\Delta T\, L/2$, where $\Delta\alpha$ is the difference in coefficient of thermal expansion(CTE) between the substrate and the chip and L is the width of the chip. The height of the solder ball is h, so the shear strain at the solder ball is about $\Delta\alpha\Delta T\, L/(2h)$. The problem becomes a typical one which had been solved when we introduced the concept of stress at the beginning of the course. For the thin film

problem, since the substrate is much thicker than the film we assume that the stresses in the substrate are negligible and the in-plane deformation of the film is the same as that of the substrate, which is dominated by thermal strain. Therefore, the stress in the thin film can be calculated using two-dimensional stress-strain relations. The validity of the assumption is verified and the bending curvature of a thin film strip is obtained after we treat the thin film strip as a limiting case of a bi-material strip (Fig. 2c). By replacing Young's modulus E in the bending curvature by $E/(1-\nu)$, where ν is the Poisson's ratio, we obtain the widely used famous Stoney equation for wafer bending curvature (Fig. 2b). Though we don't give rigorous proof which usually involves plate bending, we explain the replacement by comparing the stress-strain relations for uniaxial loading and equi-biaxial loading. The significance and application of Stoney equation in determining residual stresses in thin films in the semiconductor industry is discussed.

After pure bending is introduced, bending due to temperature gradient in the thickness direction of a homogeneous strip, and the bending of a bi-metallic strip can be taught in the class. These two are excellent examples of integrating learned materials and using linear superposition technique to solve more complicated problems. For example, the strip bending due to temperature gradient can be treated as follows: we first solve the thermal stress in the strip, assuming the two ends are fixed and the beam remains straight. To satisfy the free end condition in the original problem, we add reverse tractions at the two ends, which could be approximated by a resultant force and a moment. The problem of bending in a bi-metallic strip due to the mismatch in the coefficients of thermal expansion could be treated the same way: calculating the thermal stress for the fixed ends case plus uni-axial loading and bending of beams made of different materials. Using linear superposition technique, students would find that each sub-problem had been solved previously. Due to the wide application of the bi-metallic strip as thermometer or actuator in temperature control, bimetallic strip including its applications is a very interesting topic for students to explore.

In our class, special attention was paid to the linear superposition technique. From the above examples, we can further enhance the skill of decomposing a complicated problem into several simple problems.

Applications of Beams in MEMS

Many MEMS structures are beams. Understanding the working mechanisms of MEMS usually require the knowledge of electrodynamics, but some MEMS are pure mechanical devices and can be directly analyzed using the knowledge of beam bending. The examples include the probe of Atomic Force Microscope(AFM) for detecting adhesion force and surface profile,[7] beams for measuring elastic constants at small scale etc.,[8] and a Bio-functionalized cantilever beam as a sensor for detecting molecules of biological interest [9] (Fig. 3). The bending of AFM probe (Fig. 3a) due to vertical adhesion force is a typical problem of a cantilever beam under concentrated force at the end. The force can be determined by measuring the slope at the end of the beam, so can the deflection, which is related to surface profile,. The modeling and formulation for the problem in Fig. 3b is the same as in Fig. 3a, but for a different application, to determine

the Young's modules of the beam by measuring the deflection of the beam and the force applied. For the problem in Fig. 3c, we first introduce the concept of surface tension, and explain that one side is coated with a layer of molecules which have a specific functional group to adsorb certain anti-body molecules in the environment, and the surface tension at the surface can be changed by coating and further by adsorption of the anti-body molecules. We can imagine the problem as two stretched rubber bands, with different tension, bonded to the top and bottom surfaces of the beam. The problem can be modeled as a beam subjected to a uni-axial load and a moment, $tb\Delta\gamma/2$, at the end, where $\Delta\gamma$ is the difference of surface tension between the top and bottom surfaces, t is the thickness of the beam and b the width. The change in slope at the end is derived as a function of the bending moment. Therefore, monitoring the change of the slope at the end, the beam can be used as a sensor for detecting adsorption of antibody.

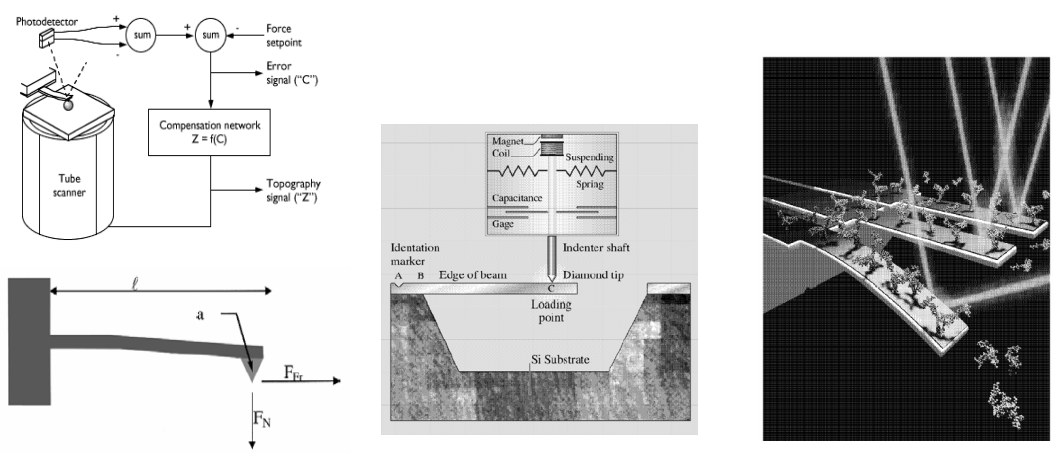

(a) (b) (c)

Fig.3 Some examples of application of beams in MEMS. a) AFM probe [7]; b) beam for measuring elastic constants at small scale; [8] and c) A biosensor for detecting anti-body.[9]

The beam structure and loading conditions are simple in the above applications, but through these examples, students are exposed to applications in the small world. By solving similar cantilever beam problems modeled from different applications, students appreciate how a simple theory can have so many applications in engineering.

Home experiments

Direct observation and hands on experiments can greatly enhance the understanding of basic concepts. Since there is no lab component in the course, we adopted four simple experiments for students to try at home. These experiments were originally designed in the department through support from the EXCEL program. They were adopted in the course after some modifications.

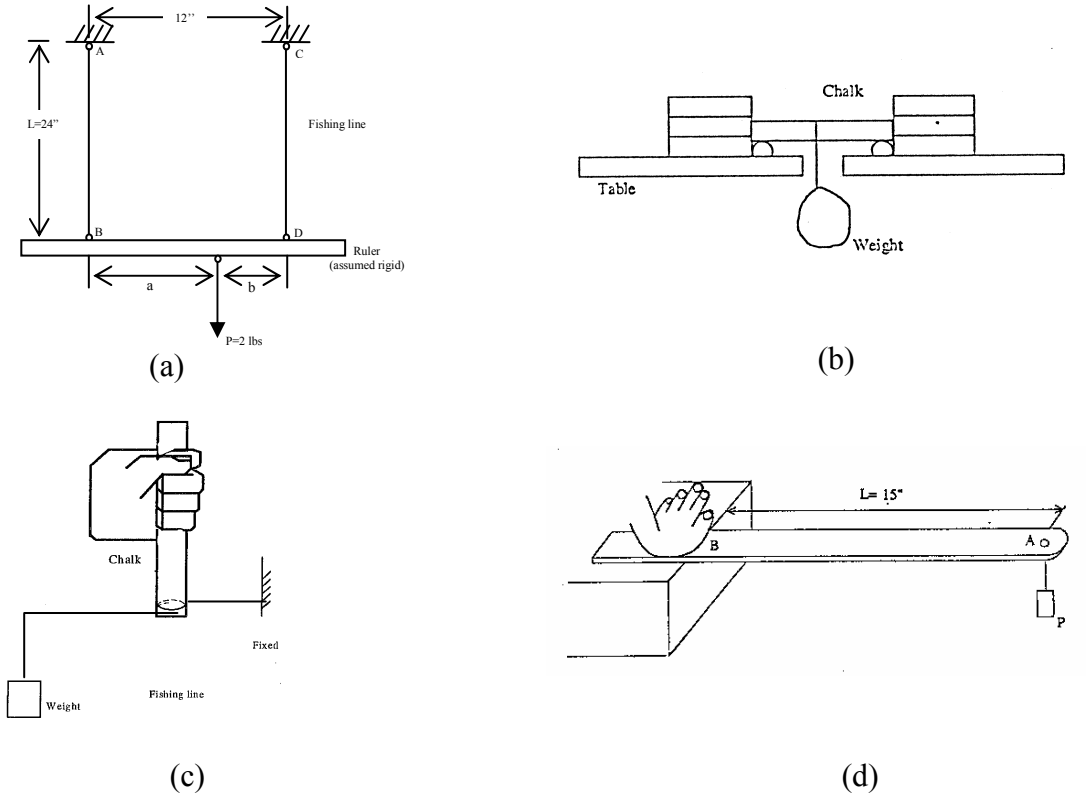

Fig. 4 Four home experiments: a) Measuring Young's modulus of fishing line; b) Breaking chalk by bending; c) Breaking chalk by torsion; and d) Determining the bending stiffness from beam deflection.

The first experiment is to measure the Young's modulus of fishing line (Fig. 4a). A ruler is suspended with two fishing lines. The total weight is fixed but the load on the individual line can be changed by varying the location of the load on the ruler. By measuring the location of the load and the elongation of the two lines, the Young's modulus can be obtained. Experiments 2 and 3 are about the brittle failure of chalk by bending and torsion. In the bending test, the breaking strength of chalk was measured by increasing the load in the middle. Using the value obtained, students make predictions on the breaking load if the load is applied away from the middle, and verify the prediction by the experiment. Furthermore, using the strength obtained from bending test and stress transformation, students can predict and verify the breaking load in the torsion test. In the last experiment, students measure the deflection of a steel ruler from experiment, and from the relation between the load and deflection of the ruler, they determine the bending stiffness. (For more detailed descriptions of home experiments, see Ref. [10].)

Other Teaching Improvement

One major difference between MoM and the Statics course is deformation. Besides home experiments, in the classroom, we demonstrate how a beam bends, a column buckles, and a tube made of foam polymer gets twisted. We used a polymer tube with a

cut in axial direction to demonstrate the axial shear interaction under torsion, and a book as a cantilever beam to illustrate the axial shear interaction from the relative motion between neighboring pages when the book is under transverse loading. These demonstrations help students gain some intuitive understanding on the concepts taught in the class.

Another change in the classroom is the reduced instruction time. Usually instructors spent a considerable amount of time in class to solve sample problems. Reducing instruction time here means the allocation of some time in each class for students to solve one or two example problems after we solved a similar one. With help from the instructor and their peers, students went through the whole process by themselves. They could identify their deficiency, clear some misconceptions and grasp the content more effectively.

Conclusion

Reforming Mechanics of Material, the most fundamental course in solid mechanics, is necessary, because the content has been fixed for several decades and MoM has found more applications in new technology. Incorporating modern examples into classroom makes the course more interesting and motivating. It is obvious in the class that the new additions are attention-grabbing. Classroom demonstrations and home experiments helped students gain intuitive understanding. Examples from real world offer a missing link between the content and the real engineering world, help students learn the modeling process, grasp the essential aspects of the problems, make reasonable assumptions, and reduce these examples into solvable mechanics problems. From surveys conducted for the course and instructor evaluations, student feedback appears to be very positive.

Acknowledgement

This work is supported by NSF through grant # 0343154.

References

1. Timoshenko, S., Strength of Materials, New York, Van Nostrand (1955).
2. Beer, F. P. Beer, Johnston, E. R., Jr., and DeWolf, J.T., Mechanics of materials, 4th edition, McGraw-hill (2005).
3. Hibbeler, R.C., Mechanics of materials, 6th edition, Prentice-Hall (2004).
4. Blackwell, G.R. "Direct Chip Attach" in *The Electronic Packaging Handbook*, Ed. Blackwell, G.R., Boca Raton: CRC Press LLC (2000).
5. L. B. Freund, L.B., Suresh S., Thin Film Materials : Stress, Defect Formation and Surface Evolution, Cambridge University Press (2004).
6. Brain, M., How Thermometers Work, http://home.howstuffworks.com/therm2.htm.
7. Baselt, D., "The tip-sample interaction in atomic force microscopy and its implications for biological applications ", Ph.D. thesis, California Institute of Technology (1993).

8. T. P. Weihs, S. Hong, J. C. Bravman, W. D. Nix, Mechanical deflection of cantilever microbeams: A new technique for testing the mechanical properties of thin films, J. Mater. Res. **3,** 931(1988).
9. Cote, R.J., Majumdar, A., Bioassay of prostratespecific antigen (PSA) using microcantilevers, Nature Biotech. **19** 856(2001).
10. Jiji, L.M., Delale, F. and Liaw, B. Home Experiments in Mechanical Engineering. 1996 ASEE Annual Conference Proceedings. Washington, DC: American Society for Engineering Education (1996).