Laboratory Experiments in Instrumentation and Control

Ray Bachnak
Texas A&M University-Corpus Christi

Abstract

Most engineering and engineering technology curricula include courses that use laboratory experiments to prepare students to apply effective solutions to real world problems. This includes the ability to define problems, identify alternative solutions, design circuits, and test systems. This paper describes a set of experiments that were developed for a junior level course in instrumentation and control. The experiments allow students to design, build, and test electronic circuits of varied levels of difficulty based on predetermined specifications. Schematic diagrams are shown and described.

Introduction

Many engineering and engineering technology curricula include courses that use laboratory experiments to enhance the students' critical thinking and problem solving skills[1-7]. The objective is normally to prepare students to apply effective solutions to real world problems, including the ability to identify alternative solutions, design circuits, and test systems. This paper presents a set of experiments that allow students to experiment with electronic circuits of varied levels of difficulty based on predetermined specifications. The topics addressed include signal conditioning, analog-to-digital conversion, digital-to-analog conversion, sensors, and feedback control systems. A major expectation is that students either have or must develop skills in reading and interpreting data sheets, especially normal and maximum ratings.

Students were asked to design, build, and test electronic circuits that meet predetermined specifications. The requirements included devising test procedures to verify the operations. They worked in two- or three-person teams but prepared individual written reports that included a one to two-page conclusion where they described the function of the circuits, discussed results, mentioned problems they faced, stated what they have learned, and suggested ways to improve the laboratory assignments.

Laboratory manuals that address many instrumentation and control concepts are available[8-11]. The main purpose for developing the experiments was to supplement the classroom lectures with laboratory materials that correspond to the topics covered in the book[12]. In addition to the four experiments presented here, students used the software that accompanied the book to generate Bode plots and design filters. They also investigated the operation of an inverting amplifier circuit and learned how to "offset null" Op-Amps. Furthermore, experiment 3 combines two original circuits and experiment 4 was redesigned to use a negative Schmitt trigger circuit and a MJE3055T power transistor.

Experiment 1

The objectives of this experiment are to get familiar with some electronic components (ADC0804, LM741, 1N5819), apply the concept of voltage division, use an Op-Amp voltage follower circuit, practice modular design principles, and understand analog-to-digital conversion.

Statement of the Problem

Design, construct, and test an analog-to-digital converter circuit taking into consideration the following specifications:

- Must use a ADC0804 A/D converter.
- Must have an input range from 0.0V to +5.0 V.
- Must have a protected VI+ input – use 1N5819 diodes and resistors as needed.
- Must have a buffered input – use an Op-Amp voltage follower.
- Must have an adjustable VREF/2 input voltage. This allows the user/designer to adjust VREF/2 to get the exact range required – use a voltage divider with a variable resistor.
- Should use LEDs to display the digital output.

Description of the Circuit

A circuit that satisfies the design requirements is shown in Fig. 1. The applied input is controlled through a variable resistor connected to a voltage follower that electrically isolates the input side from the rest of the circuit. The upper diode will be ON if the voltage at its lower end is greater than 5.7 V. This arrangement guarantees that the input voltage to pin 6 of the ADC0804 never exceeds the maximum allowed value of V_{CC} + 0.3 V. To achieve good results, the reference voltage at the pin labeled VREF is adjustable through the use of a variable resistor.

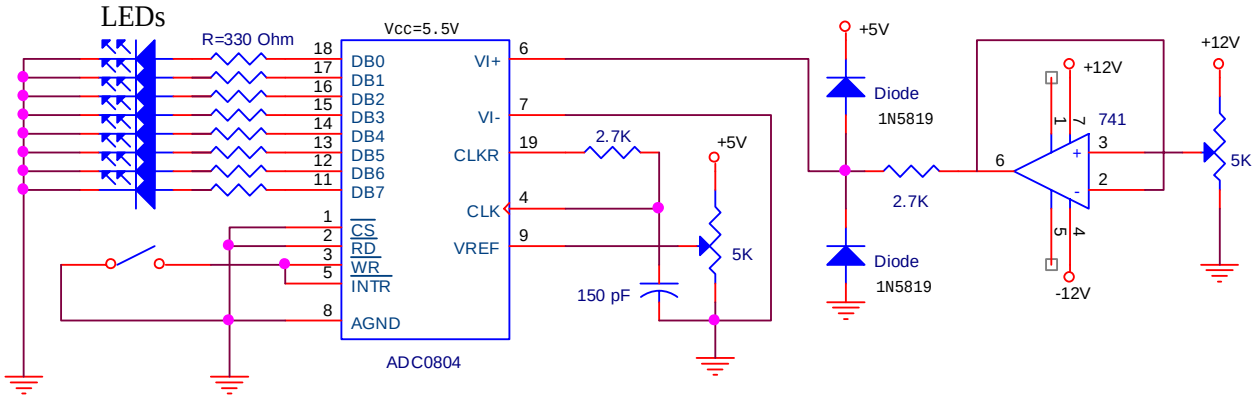

Fig. 1. Analog-to-Digital Converting Circuit

The switch connected to WR and INTR may be pressed and released to guarantee a correct operation. The circuit to CLKR and CLK is described in the data sheets of the ADC0804. The LEDs at the output reflect the digital value of the corresponding applied analog input.

Testing the Circuit

The analog-to-digital converting circuit is constructed on a breadboard and tested as follows.

1. Set the input to exactly 5V. Adjust VREF (around 2.5 V) so that the digital outputs are all HIGH. Fine-tune VREF so that all the outputs are LOW for a an input of 0 V. Measure and record the voltage at the VREF pin. **DO NOT** CHANGE VREF after this point.

2. Test the circuit using the input voltages shown in the following table. Record the observed digital outputs (HIGH = 1, LOW = 0) in the following table.

Vin	Vout (Expected)	Vout (Measured)	Correct Results?
	D_7 . . . . . D_0	D_7 . . . . . D_0	
0 V	0 0 0 0 0 0 0 0		
2 V	0 1 1 0 0 1 1 0		
2.5 V	0 1 1 1 1 1 1 1		
3 V	1 0 0 1 1 0 0 1		
5 V	1 1 1 1 1 1 1 1		

3. If some of the outputs are incorrect, go back to step 1.

Experiment 2

The objectives of this experiment are to get familiar with some electronic components (DAC0800, LM7806), use Op-Amp circuits, practice modular design principles, and understand digital-to-analog conversion.

Statement of the Problem

Design, construct, and test a digital-to-analog converter circuit taking into consideration the following specifications:

- Must use a DAC0800 D/A converter. Must have an output range of – 5.0 V to +5.0 V.
- Must have a buffered output – use an Op-Amp voltage follower circuit.
- Must use a voltage regulator to supply the reference current ($I_{REF(FS)}$) use the LM7806 voltage regulator along with a variable resistor.
- Should use LEDs to display the digital input.
- Should use variable resistors whenever appropriate to calibrate the circuit for best results.

Description of the Circuit

A circuit that satisfies the design requirements is shown in Fig. 2. A voltage of +5 V is connected through switches to the inputs of the DAC0800. The LEDs are used to allow visual verification of the input values. The LM7806 voltage regulator is used to produce the required current to VR+ for the specified –5 V to + 5 V output range. The Op-Amp circuit serves as a current to voltage converter. The 1-k variable resistor in the feedback path makes it possible to fine-tune the operation to achieve a symmetrical output. The voltage follower circuit is used to isolate the D/A circuit from the load. Other pins are described in the data sheets.

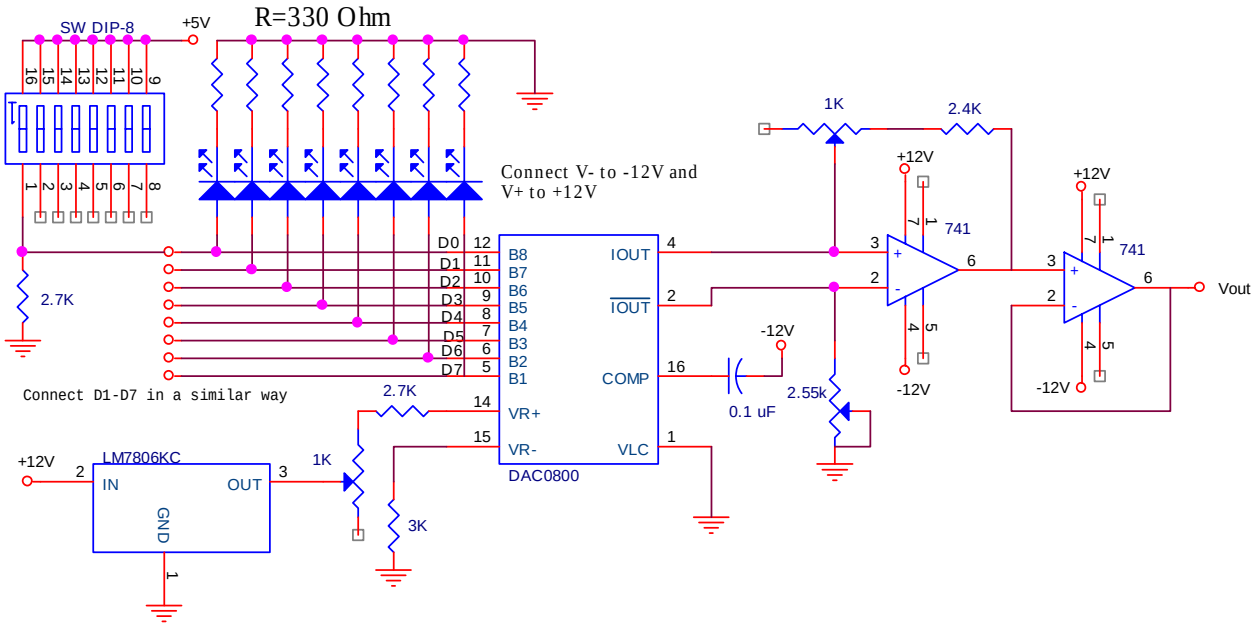

Fig. 2. Digital-to-Analog Converting Circuit

Testing the Circuit

The digital-to-analog converting circuit is constructed on a breadboard and tested as follows.

1. Apply a HIGH to the input pins (D_7 . . . . . D_0). Adjust $I_{REF(FS)}$ (it should be close to 1.992 mA) and the feedback resistor in the Op-Amp circuit so that the output voltage is as close as possible to 5 V. Test the circuit using the input combinations shown in the table below. Record the measured analog outputs. Remember that due to digitization error you will not get exact values and that you may have to adjust the circuit few times before you get optimum results.

2. Calculate the % difference between the expected and measured output voltages.

Digital Input	Vout (expected)	Vout (measured)	% difference
D_7 . . . . . D_0			
0 0 0 0 0 0 0 0	-5.0 V		
0 1 0 0 0 0 0 0	-2.5 V		
1 0 0 0 0 0 0 0	0.0 V		
1 1 0 0 0 0 0 0	+2.5 V		
1 1 1 1 1 1 1 1	+5.0 V		

Experiment 3

The objectives of this experiment are to get familiar with a temperature sensor (LM34), design a non-inverting amplifier circuit, design a voltage comparator circuit, practice modular design principles, and test a temperature sensing circuit.

Statement of the Problem

Design, construct, and test a "High Temperature" indicator circuit using a LM34 temperature sensor and other electronic components as necessary. Carry out the design in three phases as follows.

Phase I.

Design a temperature sensing circuit taking into consideration the following.

- Use a LM34 temperature sensor, a 741 Op Amp, a 20K pot, and available resistors as necessary.
- The output voltage of the circuit is exactly 5 V when the sensed temperature is 100 ^{o}F.
- Use a non-inverting amplifier circuit to get the required gain.
- Construct and test the circuit to verify its proper operation

Phase II.

Design a voltage comparator circuit taking into consideration the following.

- Use the comparator circuit shown below (to the right of the dotted line) with V_S = 12 V and R_1=3.3 kΩ.
- Assume that the voltage across the LED must not exceed +4 V and that the maximum allowed current through the LED is 20 mA.
- Determine values for R_2 and R_{out} such that for T> 80 ^{o}F the LED goes ON.
- Construct and test the circuit to verify its proper operation.

Phase III.

Combine the circuits that you designed in Phase I and Phase II so that when the temperature is above 80 ^{o}F, the LED goes ON. Construct and test the overall circuit for proper operation.

Description of the Circuit

A circuit that satisfies the design requirements is shown in Fig. 3. As specified, the gain of the non-inverting amplifier circuit is 5 and the set point of the comparator circuit is 4 V (using voltage division, R_2=1.65k). This corresponds to a temperature of 80 ^{o}F. When T exceeds 80 ^{o}F, the output from the comparator will reach saturation (without a load). A value of 500 Ω for R_{out} guarantees that the current through the LED does not exceed 20 mA.

Testing the Circuit

The circuit is constructed on a breadboard and tested as follows.

1. Construct the non-inverting amplifier circuit on a breadboard. Before attaching the LM34, apply a 1 V DC input voltage and measure the resulting output. Adjust the feedback variable resistor until you get the desired gain of 5.

2. Construct the comparator circuit on a breadboard. Connect an input voltage to pin 3 of the Op-Amp. Adjust R_2 so that the circuit is operating as expected (LED is ON as soon as the

input voltage to Pin 3 exceeds 4 V).

3. Construct the whole circuit including the LM34. Verify that the gain of the non-inverting amplifier circuit is 5. Verify that the input voltage to the second Op-Amp is 4 V. Use a soldering iron to experiment with the circuit. Measure the output from the LM34 and monitor the LED. Record the results in the table below.

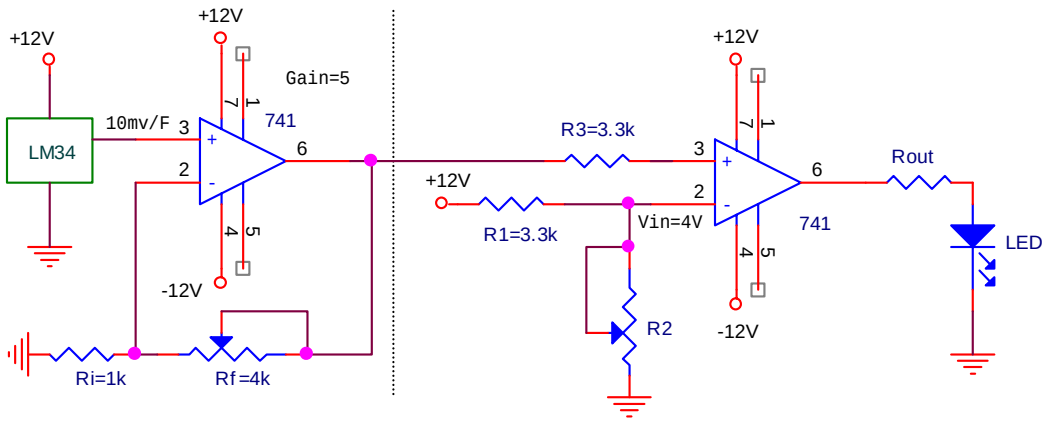

Fig. 3. "High Temperature" Indicator Circuit

TEST #	Output of the LM34 (mV)	Corresponding T (^oF)	LED is ON (Y/N)
1			
2			
3			
4			

4. Measure the current through the LED when it is ON. Is it less than 20 mA? Measure the voltage across the LED. Is it less than 4 V? Measure the voltage at the output of the second Op-Amp (with a load and without a load). Is it what you expected? Measure the current going into the + and – terminals of the Op-Amp. Are they what you expected?

Experiment 4

The objectives of this experiment are to get familiar with some electronic components (LM324, 2N3904, MJE3055), design a Schmitt trigger comparator circuit, use a relay, practice modular design principles, and understand closed loop control.

<u>Statement of the Problem</u>
Design, construct, and test a ON/OFF temperature control system according to the following specifications.

- When the temperature exceeds 85 ^oF, a 2N3904-transistor switch energizes a relay. When energized, the relay turns a fan ON.

- Use a LM34 temperature sensor with a non-inverting Op-Amp amplifier circuit having the required gain.
- Use a Schmitt trigger comparator circuit with a reference voltage of 6 V. Use the LM7806 to supply the reference voltage. Design the Schmitt trigger for a threshold temperature of less than 2 ^{o}F.
- Use the MJE3055T as a heat source.

Description of the Circuit

A circuit that satisfies the design requirements is shown in Fig. 4. The threshold of the Schmitt trigger circuit is about 0.12 V. This corresponds to a temperature change of 1.7 ^{o}F. When the temperature is 85 ^{o}F, the output from the first Op-Amp circuit is 6 V. As the temperature increases, the corresponding voltage increases until a low voltage from the Schmidt trigger is observed. The U1B Op-Amp circuit inverts the output from the Schmitt trigger. At this point, the transistor will be ON and the relay is energized. The fan cools off the transistor until the temperature is below 83.3 ^{o}F.

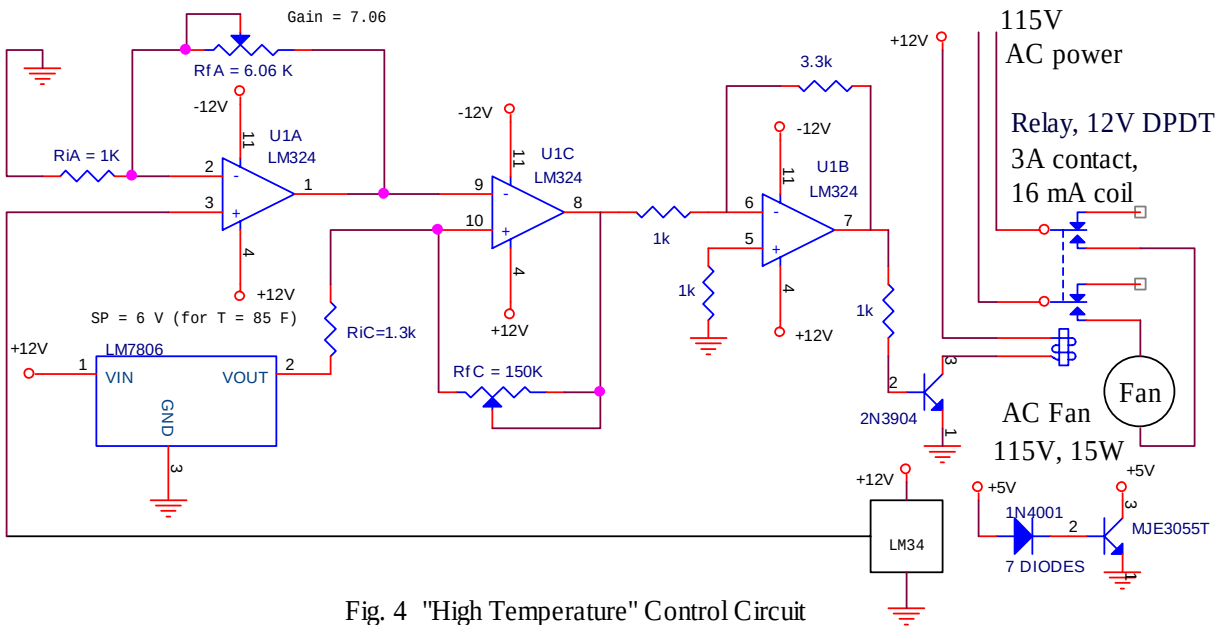

Fig. 4 "High Temperature" Control Circuit

Testing the Circuit

The circuit is constructed and tested in stages as follows.

1. Construct the non-inverting Op-Amp circuit and adjust the feedback resistor to achieve a gain of 7.06.

2. Add the Schmitt trigger circuit, including the LM7806, and verify that the voltage at pin 8 is low whenever the temperature exceeds 86.7 ^{o}F.

3. Add the inverting Op-Amp circuit and test it. The output at pin 7 should be at saturation.

4. Add the transistor and relay circuit and test it.

5. Add the fan and test the whole circuit for proper operation using the MJE3055T as a heat source. Make sure you place the MJE3055T close to the LM34. The collector current (Ic) should be around 0.7 A. The fan should be ON whenever T passes 86.7 ^{o}F and OFF whenever T is less than 83.3 ^{o}F.

Conclusion

The experiments described in this paper provide students with hands-on experience in designing, constructing, and testing four circuits that illustrate various instrumentation and control concepts. The experiments are designed to enhance the students' critical thinking and problem solving skills by allowing them to consider alternative solutions that meet predetermined design specifications. The written reports give students the opportunity to describe their designs, discuss results, mention problems they faced, state what they have learned, and suggest ways to improve the lab assignments.

Bibliography

1. J. Pickhadze and S. Hosseini, "Traffic System Control Using Allen-Bradley Programmable Controller,"1997 ASEE-NCS Annual Conference Proceedings, Dayton, OH, April 1997, pp. 358-362.
2. G. Massiha, "Design of a temperature monitoring system using microprocessor," 1998 ASEE-GSW Annual Conference Proceedings, New Orleans, LA, March 1998, pp. 320-323.
3. J. Rich, E. Ballas, C. Bryan, J. Hoffman, and T. Kropchuck, "A Laboratory Experiment in PID Control," 1995 ASEE-NCS Annual Conference Proceedings, Columbus, OH, April 1995, pp. 167-177.
4. M. Rabiee, "Analog to digital (ADC) and digital to analog (DAC) converters," 1998 ASEE Annual Conference Proceedings, Session 1559, 12 pages.
5. C. Chen, "Using LabVIEW in instrumentation and control course," 1998 ASEE Annual Conference Proceedings, Session 1559, 7 pages.
6. A. Rahrooh, "Engineering technology feedback control laboratory at University of Central Florida," 1998 ASEE Annual Conference Proceedings, Session 3548, 6 pages.
7. R. Bachnak, "A Laboratory Project in PC-based closed-loop control," 1998 ASEE-GSW Annual Conference Proceedings, New Orleans, LA, March 1998.
8. G. Williams, Modern Control Experiments, West Publishing Company, St. Paul, MN,1996.
9. W. Devenport, Experiments for Industrial Electronics, 4th Edition, Delmar Publishing, Albany, NY,1993.
10. J. Davis, Laboratory Manual to Accompany Modern Industrial Electronics, 3rd Edition, Prentice Hall, 1996.
11. R. Gillies, Instrumentation and Measurements for Electronic Technicians, 2nd Edition, Macmillan Publishing Company, 1993.
12. R. Bateson, Introduction to Control System Technology, 6th Edition, Prentice Hall, NY, 1998.

Biography

RAFIC BACHNAK

RAFIC "RAY" BACHNAK is an Associate Professor of Engineering Technology at Texas A&M University-Corpus Christi. Dr. Bachnak received his B.S., M.S., and Ph.D. degrees in Electrical and Computer Engineering from Ohio University in 1983, 1984, and 1989, respectively. He was previously on the faculty at Franklin University and Northwestern State University. Dr. Bachnak is a member of IEEE, ASEE, ISA, and SME.