# Lessons Learned from Multidisciplinary Senior Capstone Design Projects

**Mr. Jheng-Wun Su, University of Missouri**

Jheng-Wun Su is a graduate student of Mechanical Engineering at University of Missouri. He has been a teaching assistant three semesters for senior capstone design course. His current research interests include addictive manufacturing, smart material and 3D and 4D printing.

**Mr. Zhengwei Nie, University of Missouri**

Zhengwei Nie is currently a Doctoral candidate at University of Missouri. He received his Master's degree in Mechanical Engineering from Xi'an Jiaotong University, China in 2013. His current research interests include ceramics sintering, high-temperature and high-pressure manufacturing, fabrication and simulation of porous materials.

**Mr. Jiamin Wang, University of Missouri - Columbia**

Jiamin Wang is a MS Graduate Student majored in Mechanical & Aerospace Engineering at University of Missouri - Columbia. Before that, he achieved his Undergraduate Degree at East China University of Sci & Tech. Jiamin's research area of interest includes Mechanical Design, Automation and Mechatronics. His Undergraduate Capstone UAV Design is one of the 3 Case Examples mentioned in this paper.

**Prof. Yuyi Lin P.E., University of Missouri**

Dr. Yuyi Lin is a registered Professional Engineer. He has been teaching Senior Capstone Design Since 1990 at Mechanical & Aerospace Department of University of Missouri. He has done research in the study and design of non-linear dynamics of helical springs, adsorbent natural gas (ANG) conformal tank development, high pressure and high temperature manufacturing process and equipment development as applied/related to 3D printing, porous ceramic with metal infiltration.

# Lessons Learned from Multidisciplinary Senior Capstone Design Projects


## Abstract

Engineering educators, and students, are interested in exploring interdisciplinary teamwork in senior capstone design courses. This practice is believed to be beneficial for training future engineers to be more capable problem solvers. At different times and schools, the success of multi-disciplinary senior capstone teams with different approaches have produced variable results. Because design is multi-realizable, no single or simple method can be adopted for all engineering schools.

For some special circumstances, or new situations, in our College of Engineering, we have now combined two courses, the Mechanical and Aerospace Engineering Senior Capstone Design (MAE 4980) and the Engineering College Senior Capstone Design (ENGR 4890) into one class, with the same instructor from Mechanical & Aerospace Engineering. Our ENGR 4890 students come from Industrial and Manufacturing Systems Engineering, from Computer Science, and from Electrical and Computer Engineering. They are all international transfer students, mostly from China, with some from India and Middle Eastern countries.

Over the past 3 years (course offered twice each year), we have seen some beneficial results. We no longer need electrical and computer technicians from Engineering Technical Services. However, we still need to have a TA, or a graduate student chosen by the instructor who is good at electronics hardware and programming. We have successfully designed a few projects that are truly multi-disciplinary, for example, a 3D printer, a rotor craft UAV, and a special purpose lab furnace. We still cannot make all teams in a class multi-disciplinary, because some design topics do not have sufficient electronic content. We also encounter difficulty with insufficient enrollment of students from a specific major or skill to make an interdisciplinary design team. Several case studies illustrate our lessons learned, and plans to do more and better multidisciplinary senior capstone design projects for the future.


## Introduction

Mixing students from different departments in the College of Engineering, and from different colleges such as Business and Law, into senior capstone design teams, has been a practice for some years [1,2]. Many engineering educators have employed combining students from Engineering and other academics disciplines in senior capstone design courses [3-6]. Some educators believe engineering schools should not be divided into disciplines and departments [7]. How does this fit with the previous statements? Although many engineering educators agree on the benefit of having multidisciplinary capstone design teams, many practical problems limit this approach. For example, in our College of Engineering, some departments require a two-semester, 2-course sequence for senior capstone design. Some departments will not require the production of a hardware prototype. Other administrative problems exist, such as funding for prototype construction, which can take a whole paper to discuss [6,8]. Using industry sponsored, real world project topics is considered highly desirable for training practical engineering problem solver and future engineers. However, some of these topics will not have sufficient technical components for students to demonstrate their discipline specific knowledge.

For the last three years, we have had opportunities to continuously experiment with multidisciplinary capstone design. This is because we have a large influx of transferred international students. They are coming to our college to finish the last one or two years of their undergraduate education. Three departments, Electrical and Computer Engineering (ECE), Computer Science (CS) and Industrial and Manufacturing Systems Engineering (IMSE), are strongly concerned that these students do not fit into the current format of their senior capstone design courses. Since these students will receive their undergraduate diploma from their home institutions, which require them to have practice or project based capstone design coursework, they are encouraged to take the college-wide Multidisciplinary Capstone Design (ENGR 4890) course. This course is currently taught by a Mechanical & Aerospace Engineering (MAE) faculty member so that the students are learning the Engineering Design Process with Mechanical & Aerospace Engineering students in MAE 4980. The basic components in an engineering design process do not have to be discipline specific; they should include:

1. State or justify the need for the design
2. Collect information
3. Quantify the design objectives
4. Generate multiple concepts for comparison and selection
5. Detail the selected design
6. Produce the proof of concept prototype; test and improve the design
7. Communicate and report

Step 6 is strongly encouraged but not necessary, if the design team produces a very good and detailed paper design report.

Currently, about 50% of our capstone design projects are sponsored by local companies, by faculty members (using their research grants or other resources) or even by students. For non-sponsored and unfunded projects, the department of Mechanical and Aerospace Engineering pays for prototyping material and shop labor costs.

Before the semester starts, the instructor will prepare a list of recommended design topics, which should be carefully chosen so that potential projects will have multi-disciplinary technical components. Multiple discipline project content affords the opportunity for students from different departments to use their talents, and to demonstrate their discipline specific knowledge. Similar to educators from other schools, we also found that combining MAE and Electrical and Computer Engineering (ECE) students into the same team for the same design is topic relatively easy [3,5]. During last 3 years, we usually have had 3-4 MAE students and 1-2 ECE or Computer Science (CS) or Industrial and Manufacturing System Engineering (IMSE) students organized into a project team.

In this paper, we first report 3 case studies. For each case, we learned valuable lessons. To sustain and improve our multidisciplinary capstone design practice, we also identify problems we need to address.

**Case study #1—A 3D printer design**

In this case, the design team modified a previously reported design idea and built a 3D printer that uses the powder and binder concept. This project team had seven students, with one student

each from the ECE and CS departments. The topic had sufficient technical content in electronics hardware (step motor driver, power supply and amplifier) and software (Arduino board programing, PC interface). This team showed a successful multidisciplinary project and entered it in an ASME student design competition.

The project required knowledge and skill from mechanical engineering, electrical engineering and computer science, and therefore was multi-disciplinary. With help from an experienced Teaching Assistant, whose Ph.D degree research addresses a mechatronics topic, the ECE and CS students have contributed their disciplinary specific skill and knowledge to produce a functional prototype. In the past, students were getting help from the college electronic shop technicians (the department would have to pay for the labor of the technician). With ever increasing class size and limited department funding, electrical technician assistance for all design teams is not possible. This team did not require the services of a college electrical technician.

A contributing factor for the success of this team is that they manufactured a large percentage of parts using the college 3D printing shop. This is a good experience and the practice is repeatable in future capstone projects.

Also in this design case, we observed that our engineering graphics training for most students insufficient; many students need much more practice to develop the proficiency to produce quality design drawings. Fortunately, in this design team there were two students who had co-op or work experience beyond their required engineering graphics course study. Fig.1-Fig.4 show this 3D printer design, including model, prototype, and one produced sample, and the electrical components.

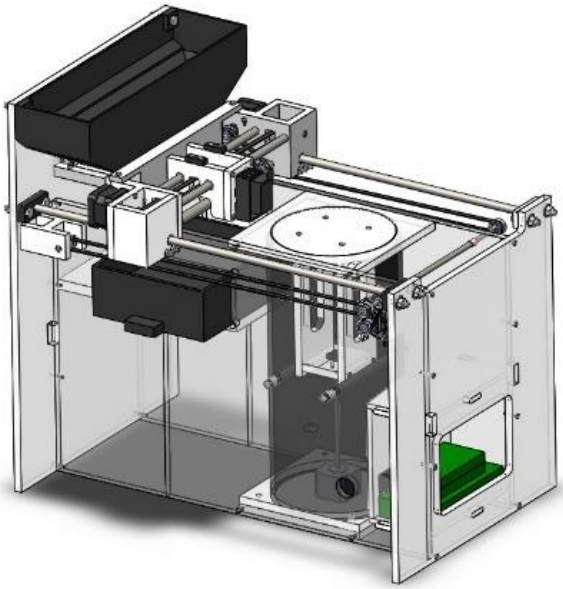

Fig.1 Solid model of the 3DP design

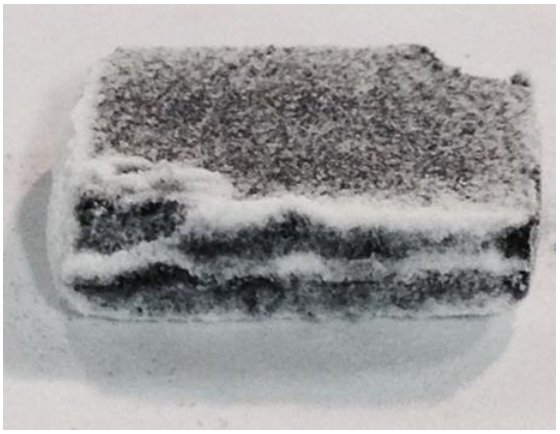

Fig.2 A produced sample by the 3DP

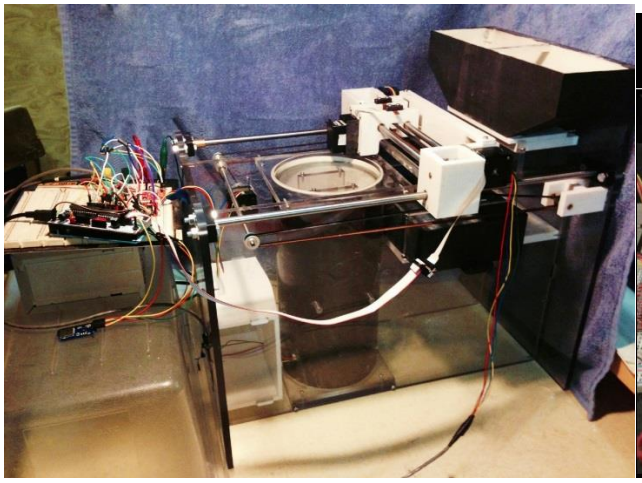

Fig.3 The prototype of 3DP

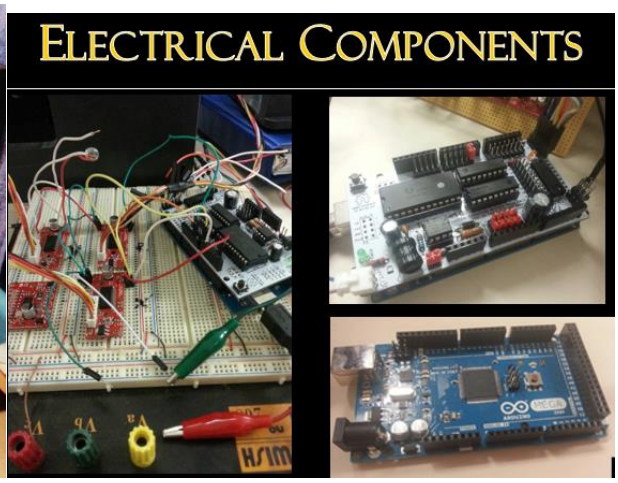


Fig.4 Electronical component of the 3DP

**Case study #2—A rotorcraft UAV**

A student team proposed this project. The topic had sufficient ECE/CS and MAE aspects to qualify as multi-disciplinary. The design team had 6 students with one CS student and one ECE student. As seen from Fig.5-Fig.6, the design is quite sophisticated. Although the team had MAE/ECE and CS students with very strong motivation and skill, the prototype had flight stability issues. The prototype, with two high capacity lithium-ion batteries, was also heavy. As an engineering educator, the instructor must encourage students to take on challenging project topics. However, it is the instructor's responsibility to scale the design so that the students can produce a functional prototype. Currently our policy strongly encourages a hardware prototype, but it is not absolutely required. Student teams must decide near the beginning of the semester whether or not to manufacture a hardware prototype.

This project taught the faculty that it is possible for our capstone team to design and produce their own PCB (Printed Circuit Board) with public domain software tool and limited hardware. The experience and practice is sustainable for future projects.

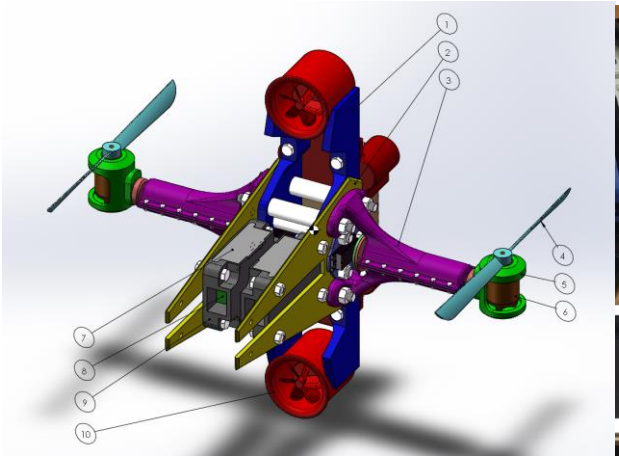

Fig.5 Solid model for rotorcraft UAV

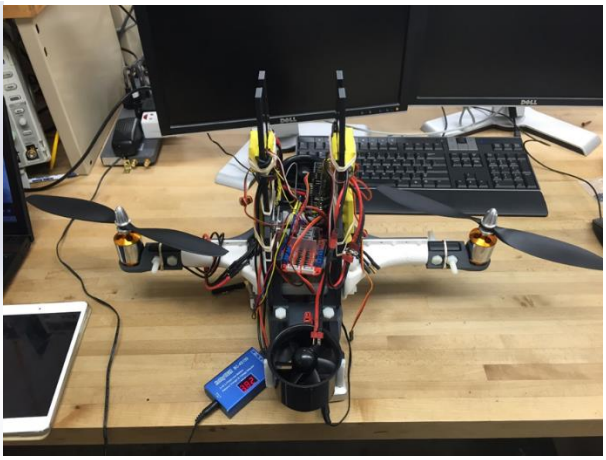

Fig.6 The prototype of UAV

A well-educated design engineer should be able to clearly explain why and how a design works; this is more important than actually producing the prototype. Given time and funding, a high school graduate, or an electrical technician without college training may be able to produce a similar device. This case also showed that a hardware prototype does not necessarily prove a design is good. A well prepared design report with good engineering analysis and design specification can better support and prove a good design.

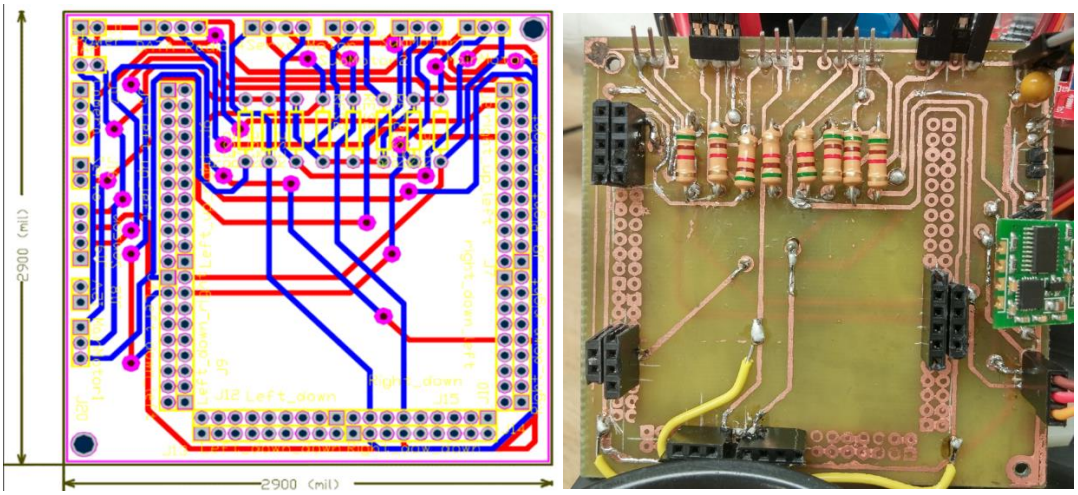

Fig.7 Multidisciplinary team made PCB board

**Case study #3—A vehicle demonstrating inverted pendulum control**

This project was completed in FS 2015. The purpose of the project was not to design a sophisticated toy car, but to explain and demonstrate the dynamics and control principles of an inherently unstable mechanical system. The team had a combination of backgrounds: two students had many years of machine shop experience, two had strong control theory and electronics training. Integrating talents from different disciplines is crucial for the success of a multidisciplinary design team.

This project was more complete than the one in Case #2, because the team better explained the dynamics and the control action. They also successfully demonstrated how these physical principles actually work through their functional prototype.

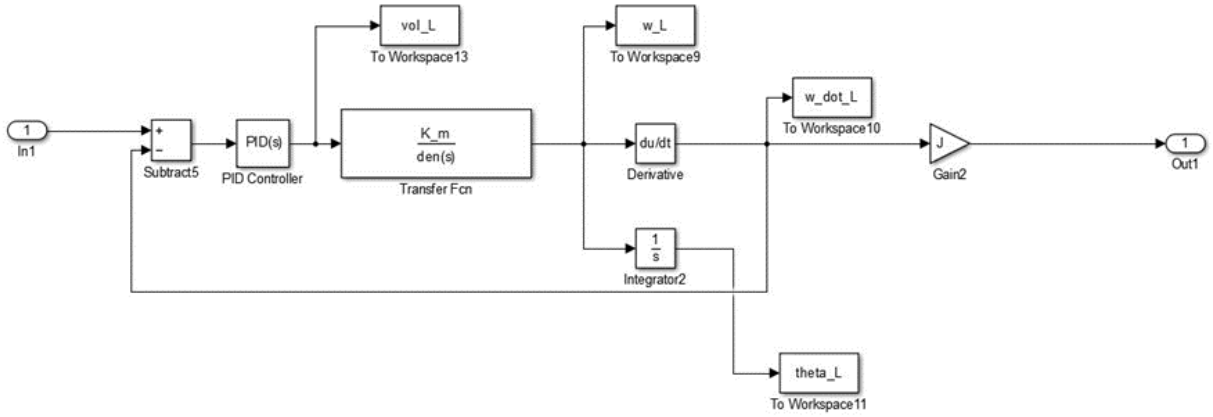


Fig.8 Multiple motor control block diagram

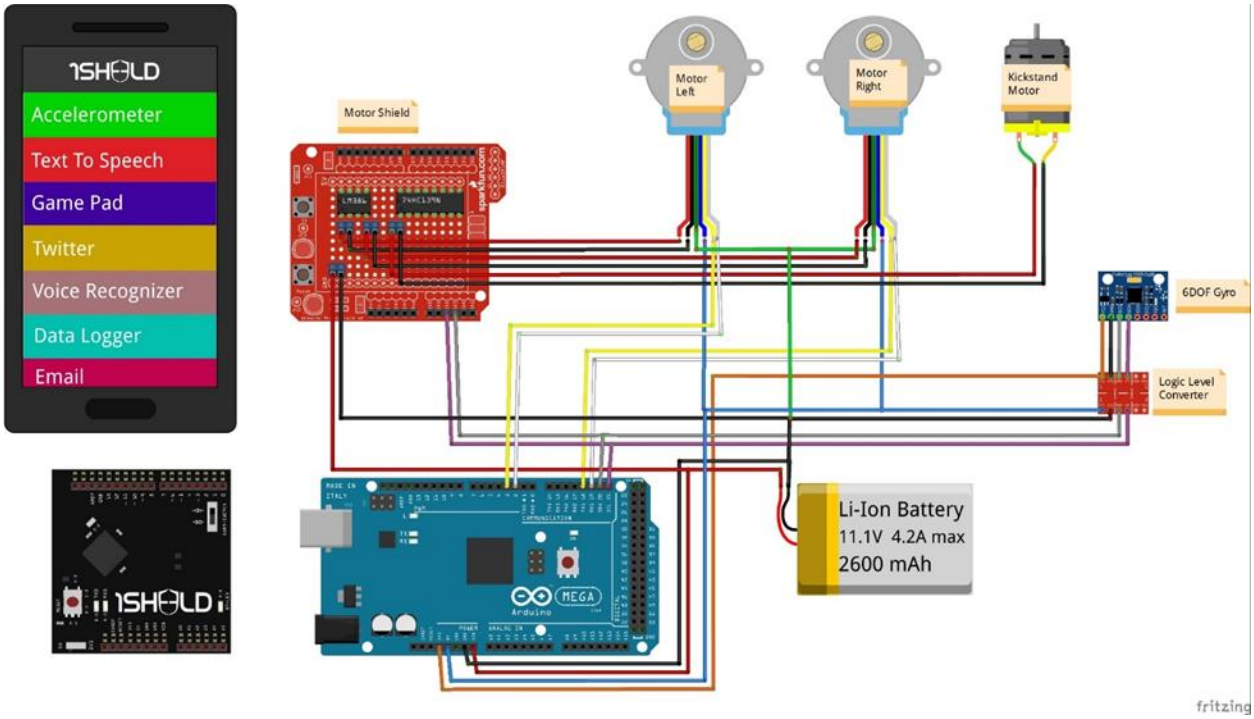


Fig.9 Cell phone control and electrical subsystem

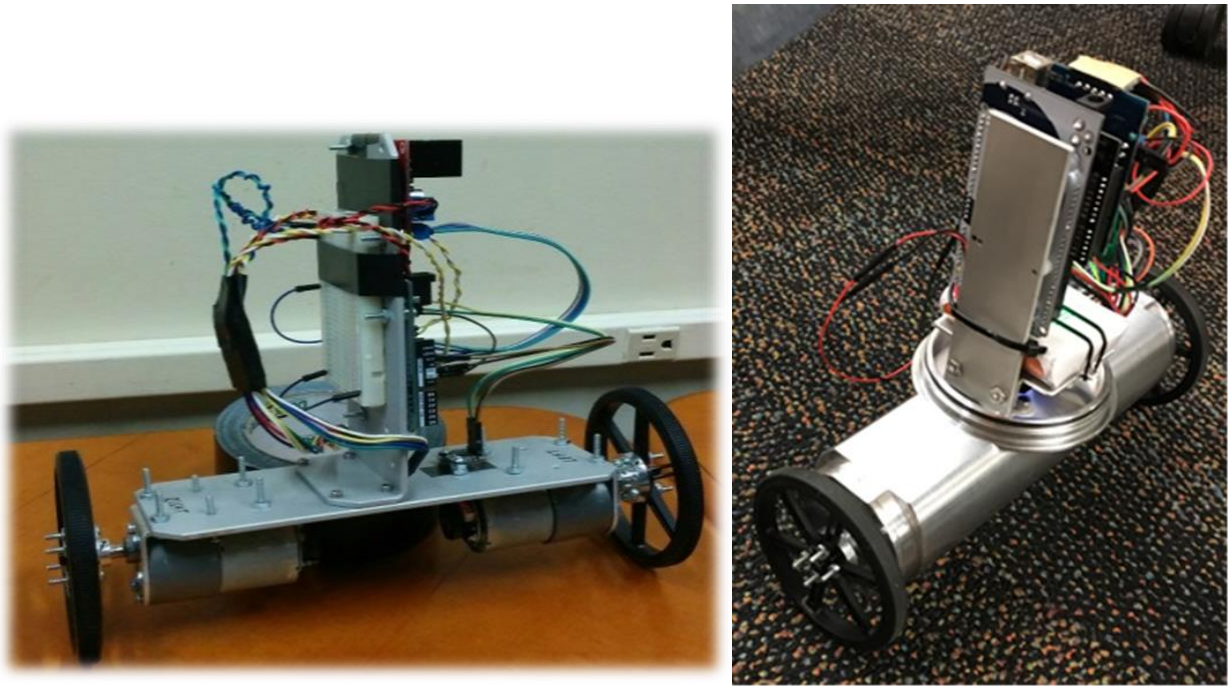

Fig.10 Version 2 and Version 3 prototypes

This case raised a sustainability question: how do the instructors find students with different talents to organize a successful project team like this one. Currently most of our design teams are student organized, except the instructors add students from other departments. This case showed that a successful multidisciplinary project team can be organized by existing talents, not necessarily from the targeted departments or disciplines.

**Conclusion**

In last three years, due to unexpected and historical reasons, we have had the fortunate opportunity to find and construct multidisciplinary capstone design projects and teams. We have had some successful cases to report. However, factors exist over which we do not have complete control, and therefore success was partially fortuitous. For example, we know we had, and we will continue to have, students coming from 3 departments inside our college, but do not know how many from which department in a specific semester. This unpredictability can result in a sustainability problem. International students come from different foreign institutions, adding additional uncertainty for the instruction team in organizing better balanced multidisciplinary teams. To reproduce good experiences and better train our students, we have identified process elements that we should do more and do better. The following summarizes those practices (they will be limited by have resources constraints):

1. Well-trained Teaching Assistants are very important in the instruction team to assist and help multidisciplinary students. These TAs could be MS graduate students with successful multidisciplinary experience themselves. Ph.D level graduate student TAs provide a more stable instruction team.
2. Some physical space for student team activities is important. Student teams need lab space with measuring instruments and they need storage space for parts and prototypes.
3. Carefully choosing suitable topics with sufficient multi-disciplinary content is very important. We have seen very good results for some institutions where the design topics

are "standardized," for example, design a two stage speed reduction gear box, with variations in power and type of transmission. Embracing the real world, doing company and individual sponsored projects with prototype is still our main objective.

4. Building up hardware and software libraries from past design cases is very important for sustainability.
5. Student access to machine shop and electronics equipment is important. In the past, all electronics work was done by Engineering Technical Service professional staff. However, we found it possible to find some space, and accumulate some tools and parts so that in the future students can do much of the necessary electronics work themselves

Although most engineering design educators agree that organizing multi-disciplinary senior capstone design team and project topics are highly desirable, due to various reasons this idea has not been widely or sustainably practiced in all engineering schools. We are taking an inductive reasoning (or cognition) approach, to report and to share limited case experience and lessons learned with other engineering educators, who may like to use deductive reasoning approach in training students. Although we cannot yet make generalizations about what we can do stably and sustainably, we want to start contributing to an on-going discourse aimed at improving multi-disciplinary senior capstone design courses

**Acknowledgment**
The authors wish to thank Dr. Peter Hodges for proofreading the final manuscript.

**References**

[1] Macklin, J. and K.G. King, 2015, "Twenty Years of Multidisciplinary Capstone Projects: Design, Implementation, and Assessment," Proceedings of 2015 ASEE Annual Conference.
[2] Hovsapian, R.O., Chiang Shih, J. Ordonez, J, Vargas and N.G. Costa, 2012, "Enhancing Senior Capstone Design Course through International and Multidisciplinary Projects," Proceedings of 2012 ASEE Annual Conference.
[3] Tougaw, D. and J.D. Will, 2003, "An Innovative Multidisciplinary Capstone Design Course Sequence," Proceedings of 2003 ASEE Annual Conference.
[4] Lumpp, J., J. Jacob, S. Smith and W. Smith, 2006, "BIG BLUE: A Multidisciplinary Capstone Engineering Design Project," Proceedings of 2006 ASEE Annual Conference.
[5] Abu-Mulaweh, H.I., H.M. Oloomi, D.W. Mueller Jr. and O.A. Thomas, 2012, "A Multidisciplinary Capstone Senior Project: Interactive Cooling System Demonstration Unit," Proceedings of 2012 ASEE Annual Conference.
[6] Jariwala, A.S., S. Vaish and D. Rosen, 2014, "Enabling Institute-wide Multidisciplinary Engineering Capstone Design Experiences," Proceedings of 2014 ASEE Annual Conference.
[7] Magee, C.L., Kin Leong Pey, Jin Chen, Jianxi Luo and D.D. Frey, 2011, "Beyond R&D: What Design Adds to a Modern Research University," *Design Education: Innovation and Entrepreneurship,* Proceedings of Harvey Mudd Design Workshop VIII.
[8] Lin, Yuyi, Xiuting Wei, Lanmei Wang, Yanfei Zhang, Wenqiang Yu and Yufeng Sun, 2012, "Synchronizing the Teaching of Capstone Design Course in Two Countries," Proceedings of 2012 ASEE Annual Conference.