AC 2011-2120: LINKING CAD AND METROLOGY TO EXPLAIN, DEMONSTRATE, AND TEACH GD&T

Mr. Kyle Patrick Hewerdine
James M Leake, University of Illinois, Urbana-Champaign

James M. Leake joined the Department of Industrial and Enterprise Systems (formerly General) Engineering in August 1999. His educational background includes an MS in Mechanical Engineering (1993) from the University of Washington, a BS in Ocean Engineering (1980) from Florida Atlantic University, and a BA in Art History (1974) from Indiana University. His current research interests include engineering education, integration of CAD/CAE software in the engineering curriculum, building information modeling, spatial visualization, and reverse engineering. Professor Leake's publications include two books, Engineering Design Graphics: Sketching, Modeling, and Visualization published by John Wiley and Sons in 2008, and Autodesk Inventor published by McGraw-Hill in 2004. Prior to coming to Illinois, Leake taught CAD and math courses at UAE University in the United Arab Emirates. He is a returned Peace Corps Volunteer, where he served in Tunisia from 1983 until 1986. Leake worked as a naval architect in the Pacific Northwest for 10 years. He is a registered professional engineer in naval architecture in the state of Washington (1990).

Assoc. Prof. Emeritus W Brent Hall, University of Illinois at Urbana-Champaign

W. Brent Hall does teaching and research in mechanical and structural design, structural reliability and risk, and cold-formed steel design.

Linking CAD and Metrology to Explain, Demonstrate, and Teach Geometric Dimensioning and Tolerancing

Abstract

Geometric dimensioning and tolerancing, or GD&T, is a symbolic language that permits design engineers, manufacturing personnel, and quality inspectors to communicate in an efficient and effective manner. This communication focuses on providing a clear definition of geometric features (e.g., surfaces, holes) and the allowable variation that each feature may contain. Unfortunately, owing in part to its complex rule based system, GD&T is also difficult to teach and learn. To address this difficulty, a technique has been developed that allows students to visualize geometric tolerances and tolerance zones, and to directly see when a given data point is in or out of tolerance. The technique employs a portable coordinate measuring machine (CMM) interfaced with parametric solid modeling software, a 3D printer, and a granite surface table to accomplish this. A set of engineering drawings is created, and a 3D printer is used to produce imperfect parts. These imperfections are intended to represent significant manufacturing variation. Then using a portable CMM and the surface table, data points are taken to visually map this manufacturing variation to a 3D parametric modeler. Within this software a perfect part is also modeled. Once the inspection data is taken, datum features on the perfect part are used to form the boundaries of the geometric tolerance zones. Through this process, students interactively learn the meaning of datum references, as well as how the various tolerances create different zones. Finally, students use the parametric modeling software to measure the inspection data points to visually see how in or out of specification a given feature is. Having developed a basic working understanding of GD&T, a second module is used to convey design intent through the use of GD&T. Using a simple assembly, students are charged with providing a fully toleranced drawing for one component of this assembly. Students are given a fully dimensioned drawing with basic dimensions and a list of fit, form, and functional requirements. From these resources, students must choose a datum scheme, tolerance part features, and explain which requirements drive their decisions. In summary, the goal of these educational modules is to illustrate the complex topics of geometric dimensioning and tolerancing through practical application.

Introduction

Geometric dimensioning and tolerancing (GD&T) is a tool used by engineers and manufacturers to describe part features and their allowable manufacturing variation in an engineering drawing. Through the specification of these properties, designers can guarantee better part quality, part interchangeability, and part function. One company that utilizes GD&T is Caterpillar Inc., where a specific group is dedicated to the analysis and implementation of geometric tolerances [1]. Many of the problems this group encounters originate from engineers who lack sufficient knowledge of GD&T practices. As a result the company spends significant financial resources on corrective actions, as well as on teaching engineers the proper fundamentals of GD&T. This is not a problem unique to Caterpillar Inc., and despite the prevalence of the tool across many different industries, frequently young engineers do not leave university training with a good foundation in the topic. Engineering programs have difficulty teaching GD&T due to its complex rule based nature, as well as the time needed to do the subject justice.

The focus of this paper, then, is the development of a hands-on, visually based method for

teaching geometric dimensioning and tolerancing. In order to be successful, the program must provide an ample introduction to GD&T, while presenting the subject in a stimulating and succinct manner. To attain these goals two laboratory units are developed; one unit focuses on the fundamentals of GD&T and the other focuses on its application.

In the first laboratory unit a portable coordinate measuring machine (CMM), a three-dimensional parametric modeling program, a granite surface table, and a three-dimensional printer are utilized to simulate a manufacturing environment and to perform geometric metrology (i.e., part inspection). The first step is to use the parametric modeler to develop a three-dimensional part with purposely modeled-in variation, and the three-dimensional printer is then used to manufacture this part. The next step in the development involves interfacing the CMM with the parametric modeler, so that geometric metrology can be performed. Student teams fixture the manufactured part to the granite surface plate, and then inspect the part variation with the CMM. This interactive unit serves to familiarize students with the concepts of datums, manufacturing variation, and geometric tolerances and their boundaries.

The second laboratory unit focuses on applying geometric tolerances in order to reflect design intent. Students are given a design scenario that includes: 1) an engineering drawing with basic dimensions, 2) a description of the process where the design is used, and 3) a list of acceptable variational requirements that the design must meet. Students then use the process description and the variational requirements to derive tolerances for the drawing, and complete a follow up worksheet to explain which requirements drive the tolerance scheme. Through this exercise students learn how to reflect design intent in an engineering drawing through the use of geometric tolerances, while reinforcing and practicing the principles of GD&T learned during the first laboratory unit.

This program aims to not only educate students on the basics of GD&T, but also to motivate student interest in the topic through the use of hands-on, visually based laboratory exercises. These exercises are designed to be more effective than the customary rule based explanation of GD&T, because they incorporate an interactive component that traditional approaches leave out. Instructors are able to efficiently cover multiple subjects, and students stay engaged during the educational process, as they physically practice GD&T, parametric modeling techniques, and metrology. While this program is not a substitute for a full training class on GD&T, it should provide a sufficient introduction for students.

Background

These GD&T laboratory exercises are developed for the introductory engineering graphics and design course at the University of Illinois at Urbana-Champaign. By the time that this material is covered, students have a working knowledge of two-dimensional engineering drawings with basic dimensions and dimensional tolerances. The sketching laboratory session for the class is held in an area known as the Product Dissection Lab, or PDL, where various pieces of equipment are available. The GD&T standard used for this work is the American Society of Mechanical Engineers (ASME) Y14.5M-1994 Dimensioning and Tolerancing standard [2].

To better define what purpose geometric dimensioning and tolerancing serves in industry, the Statistical Tolerance Analysis (STA) team at Caterpillar Inc. was interviewed [1]. The purpose of this group is to resolve all issues involving GD&T and either manufacturing, fabrication, or new

product validation within Caterpillar.

As a consultant group specializing in geometric dimensioning and tolerancing, the Caterpillar STA group sees a wide variety of drawings from many different design teams. Most of the customers the group works with only possess a basic understanding of GD&T and frequently they simply rely on, 'The way it was done before.' As a result, many of the drawings are only partially toleranced, the datum schemes are incomplete, circular references exist between tolerances, and overall the engineering print does not reflect the fit, form, and function of the final product.

These drawing errors can ultimately affect Caterpillar's bottom line, because their engineering drawings serve as a legal and binding agreement between the company and their suppliers. As a result, if an engineer is not careful and just carries over tolerances or has an incomplete tolerance scheme, Caterpillar is obligated to accept parts that may have too much variation for their intended function. Alternatively, Caterpillar would also have to reject parts that do not meet the print, even though they could potentially function properly. Both of these scenarios increase the supplier's cost, which ultimately raises the price Caterpillar pays for manufacturing, and adversely affects the relationship between Caterpillar and their suppliers.

Additionally, if an engineer does not understand tolerancing, he/she can artificially make the tolerance value tighter than necessary, and this can lead to increased manufacturing costs. While the part may be manufactured correctly, the level of control required by the drawing increases the complexity and time required to produce the part. The converse is also true. If tolerances are too loose, re-work may be required to correct the manufactured parts, or at the very least extra time must be spent by the engineer approving the out of tolerance part. This too raises Caterpillar's manufacturing costs. In the end, all of these factors hinder Caterpillar's ability to produce a competitive product within the heavy equipment, power generation, and construction industries. As a result, groups such as STA team at Caterpillar must exist to help correct these problems.

To gain insight into GD&T teaching methods, both traditional and alternative techniques were investigated. The traditional sources included an academic textbook: *Engineering Graphics Principles with Geometric Dimensioning and Tolerancing* by Max Raisor [3] and an industry training manual: *Geometric Dimensioning and Tolerancing Workbook* by Al Neumann [4]. Additionally, an ASEE conference paper, 'Virtual CAD Parts to Enhance Learning of Geometric Dimensioning and Tolerancing', was consulted. This paper establishes an alternative method for teaching GD&T through virtual measurements using CAD software [5]. In the program, four modules focusing on the GD&T classes of form, orientation, runout, and position were developed, and students completed these modules in laboratory sections. In these modules students open part files that have been purposely modeled with imperfect features in solid modeling software. It was then the student's responsibility to build a 'perfect' fixture, so that the two parts could be combined and the amount of variation measured. This method serves to demonstrate the idea of part variation, as well as how to theoretically check the acceptable limits on part features using CAD software. Additional resources used for the project can be found in bibliography.

Equipment

The specific equipment used for this laboratory includes an Immersion MicroScribe G2X digitizer or portable CMM, Autodesk Inventor parametric modeling software, a HighRes plug-in package from ReverseEngineering.com that is used to link Inventor and the MicroScribe [6], a granite surface plate, precision ground aluminum blocks, and a Stratasys Dimension 1200 three-dimensional printer. The equipment is used to simulate a manufacturing and quality inspection environment, where students perform geometric metrology on various manufactured parts. Through the process of inspecting the parts, the fundamentals of GD&T are taught and practiced. The Dimension three-dimensional printer, shown in Figure 1, is used to simulate the manufacturing equipment, while the granite surface plate and precision ground aluminum blocks simulate an inspection table, as seen in Figure 2. The MicroScribe G2X CMM, shown in Figure 3, works in conjunction with Inventor to take part measurements, after the printed parts are fixtured to the inspection table.

Figure 1: The Stratasys Dimension SST 1200.

Figure 2: Using the aluminum side rails and granite surface plate to fixture a part.

Figure 3: The Immersion MicroScribe G2X.

Results

The aim of this work is to improve upon the standard practice of geometric dimensioning and tolerancing instruction by incorporating hands on activities. In order to accomplish this task, the Immersion Microscribe is used to capture variation present in physical part models, so that students are able to visualize what manufacturing variation is, and how different tolerances are able to control this variation through the use of tolerance zones and boundaries.

The specific deliverables for this work include two lab units, a complete laboratory setup for inspection, instruction manuals for interfacing the portable CMM with Inventor, and Inventor part files with and without manufacturing variation. The first lab unit includes: 1) a classroom lecture portion on datums, geometric tolerances, tolerance zones, and variation location, 2) a guided exercise on datums, tolerance zones, and variation, and 3) an independent exercise calling for the inspection of two rapid prototype parts with manufacturing variation modeled in. The second lab unit includes a classroom lecture portion on design intent and an exercise focused on applying these engineering tools in real world scenarios. The central objective of the program is to engage students so that they become interested, interact, ask questions, actively participate and ultimately learn the material. The interactive nature of the program is a divergence from the traditional strategy of teaching geometric dimensioning and tolerancing built on its rule based system, which both professors and students find dry and difficult to teach and grasp. Furthermore students are not only taught the fundamentals of these tools, but also how to properly utilize them during the design process.

Lab Unit 1: Datums, Variation, and Geometric Tolerancing
The first section of this work focuses on introducing the student to the concept of datums, variation, and geometric tolerancing. The material is broken down into an informational section, which could be presented to students either by a teaching assistant in a laboratory session or an instructor in a lecture environment. By including a classroom section, students are first exposed to the concepts, and are able to ask questions. This informational session is then followed by an independent lab study session that can be completed individually or in groups. This individual period gives the students the opportunity to actively complete a guided tutorial covering the material presented in the lecture portion.

Introduction to Datums and Part Variation

The lecture material begins with an introduction to datums. To present the topic, a simple rectangular block is created and three surfaces are chosen as datums. These datum surfaces are designed orthonormal to one another, so an easy comparison to a Cartesian coordinate system can be made. By doing this, students are able to grasp the concept of a coordinate system on the part, as well as to visualize how the coordinate system is defined. The block drawing can be seen in Figure 4.

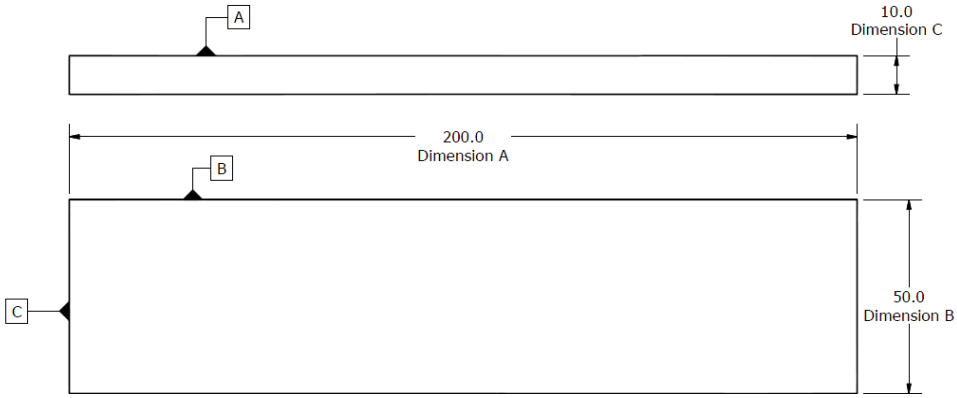

Figure 4: The rectangular block with datums.

The next segment of the lecture focuses on datum usage and datum reference frames. To physically demonstrate these concepts, a rapid-prototyped rectangular block is used as a teaching aid. Prior to the printing of this block, visually detectable imperfections are added to the Inventor model to simulate manufacturing variation. This is done because the manufacturing variation of the Dimension three-dimensional printer is too small to be visually detectable [7].

The printed rectangular block is placed on the inspection table in different configurations. The order in which the part datums contact the simulated datums of the inspection table help students to grasp the idea of fixturing a part using primary, secondary, and tertiary datums. Through this process, the relationships between the degree of freedom removal, datum references, and inspection baselines are established. An illustration demonstrating the setup can be seen in Figure 5.

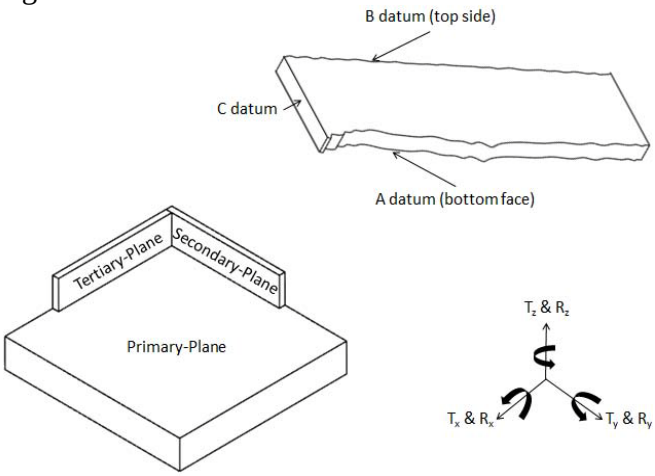

Figure 5: Illustration of inspection table, degrees of freedom, and rectangular block with variation.

Introduction to Geometric Tolerances
Once the concept of datums is established, the students are next exposed to geometric tolerances. Of the five categories of form, profile, orientation, location and runout, the lecture and laboratory only focus on the first four. Within each respective class the flatness tolerance (form), profile of a surface tolerance (profile), perpendicularity tolerance (orientation), and true position tolerance (location) are explained in detail. Since many of the basic concepts hold for tolerances within a class, a discussion of one tolerance type within each category is sufficient to gain insight into the remaining tolerance types. In addition to the explanation of these four geometric tolerances, the inspection procedure for each tolerance type is also covered in the lecture to further explain and reinforce the material.

Inspection Procedure Development
The MicroScribe G2X has the ability to interface with parametric solid modeling software packages [8]. In the case of Inventor and the HighRes plug in package, the CMM interfaces with a standard Inventor part file (.ipt file extension). This part file can contain previously created geometry or it can be blank, but the default coordinate system of the part file is always used as the reference for the X, Y, and Z components of the points taken by the CMM. It is also important to match the unit settings of the CMM to the units of the part file. During the calibration of the G2X the XY, YZ, and XZ planes of the measurement table are made to coincide with to the same default features in the Inventor part file. When these work features in Inventor are made visible, the relationship between the measurement table planes and the default planes in Inventor becomes clear to the student.

During the process of inspecting a physical part, the student takes a sampling of points on the feature of interest. As the student takes inspection points, they appear in the Inventor graphics window. In utilizing the capabilities of the solid modeling software, the challenge of mentally visualizing the inspected surface is removed. This allows students to limit their focus to the variation in the part and how it appears in reality.

Another benefit of utilizing Inventor is that the perfect part can be modeled prior to the inspection process. Since geometric tolerancing is heavily based on theoretically correct features, this allows students to create the perfect part in Inventor as a reference for the inspection points taken by the CMM. Students can then pan, zoom, and rotate to see the relationship between the inspection points and the perfect features. This connection between the perfect feature and the inspection points naturally introduces the idea of a tolerance zone. This concept of a zone is then expanded upon, as the students are required to model the actual tolerance zones, and to then take measurements in order to see how in/out of tolerance the inspection points are.

Profile of a Surface Tolerance Inspection Procedure Development
The first tolerance introduced, is the profile of a surface tolerance found in ASME Y14.5M - 1994 [2]. To demonstrate the interpretation and implementation of this tolerance, again the rectangular block teaching aid is used. The profile of a surface tolerance is given a value of 10 mm, and is applied with respect to datum -A-, datum -B-, and datum -C-. The rapid-prototyped block is then fixtured to the inspection table using the appropriate datum references specified in the drawing, as seen in Figure 6b.

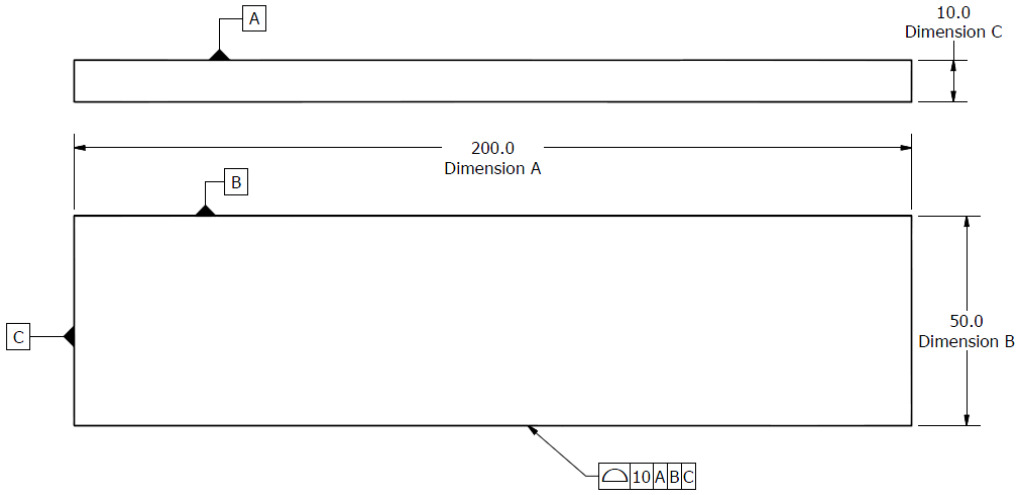

Figure 6a: Rectangular block with a 10 mm profile of a surface tolerance applied.

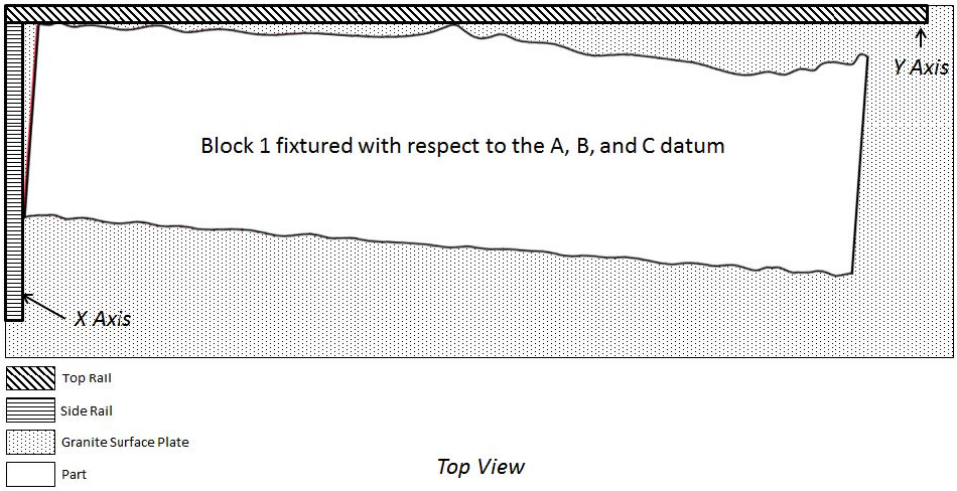

Figure 6b: Block 1 fully fixture to the measurement table.

A part file containing the perfect block is opened in Inventor, which is modeled in the same configuration as that of the imperfect block on the inspection table. The CMM is then interfaced with the solid modeler. Inspection points are taken with the CMM and they appear near the perfect surface modeled in Inventor. After the inspection points are complete, the plane feature in Inventor is used to model the boundary zones of the tolerance around the perfect surface. At this point, it is now evident whether the inspection points fall within the boundary limits of the tolerance. The measurement function in Inventor can also be utilized to measure the inspection points against the tolerance limits. This can be seen in Figure 7.

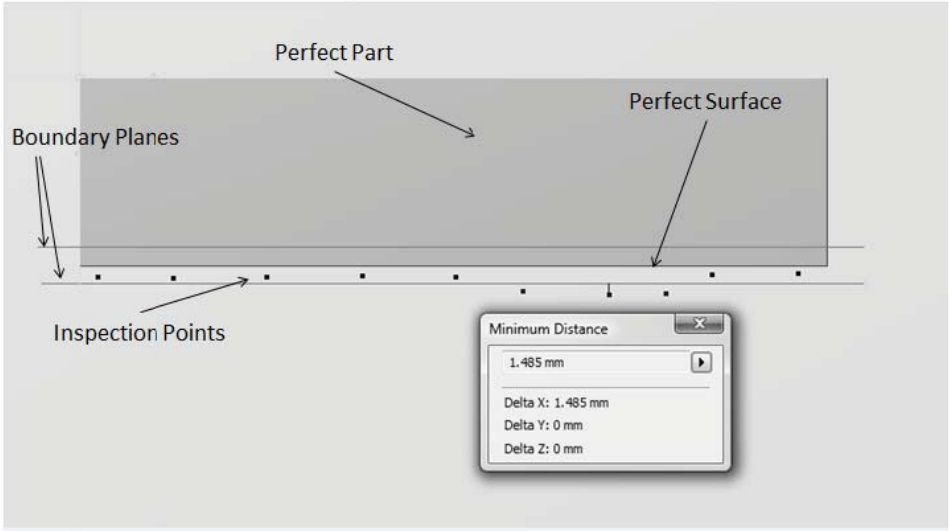

Figure 7: Profile inspection results, as seen from above. The most extreme point is 1.485 mm out of tolerance.

Perpendicularity Tolerance Inspection Procedure Development
Much like the profile of a surface tolerance, the perpendicularity tolerance process begins with the fixturing of the rapid prototyped block to the table, the synchronizing of the CMM with Inventor, and the recording of inspection points. However, since perpendicularity only controls orientation, and not location, a separate post-processing inspection procedure is required.

The post-processing procedure is designed to measure the variation within a set of inspection points and then compare this value against the perpendicularity tolerance value. To do this, a measurement plane needs to be chosen as a baseline reference. In this case of the profile tolerance the perfect surface is used as the measurement plane, because the block has all six degrees of freedom locked by the datum reference frame. So the perfect surface in the solid model and the physical surface on the inspection table coincide. However, in the case of a perpendicularity tolerance, the datum reference frame does not control all six degrees of freedom. With this freedom, the block has the ability to move on the inspection table and the perfect surface in the solid model does not necessarily coincide with the physical surface on the inspection table. Therefore, a baseline plane must be created from the inspection data and not from a perfect surface in Inventor.

The process of creating a baseline plane begins by creating a two dimensional sketch on the simulated datum surface, which is perpendicular to the toleranced feature. On this sketch, the first inspection point and the last inspection point are projected onto the sketch plane. Through these two projected points, an approximate line of best fit is created for the remaining inspection points, as seen in Figure 8.

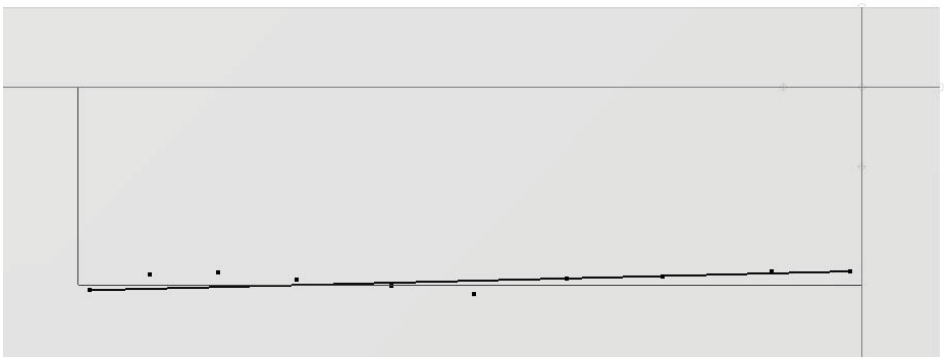

Figure 8: Best-fit line created between the first and last projected points.

The sketch is then exited, and the best fit line and the datum reference plane are selected, so that a plane is created which is perpendicular to the datum reference plane and oriented along the best fit line, as seen in Figure 9. This plane approximates the location and orientation of the physical surface on the inspection table.

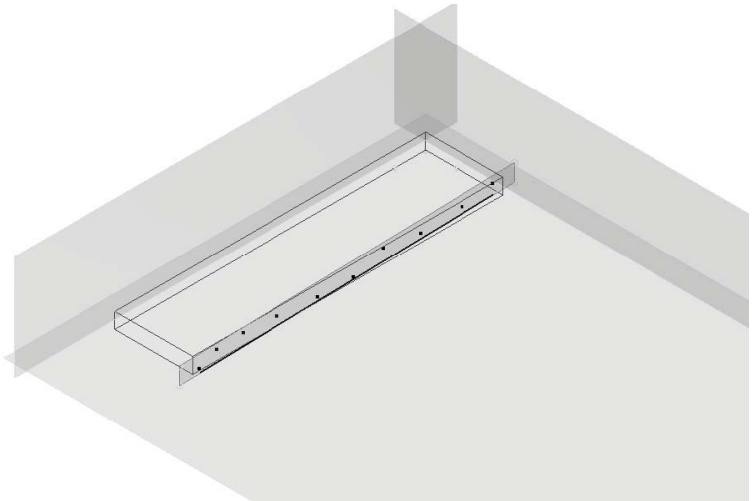

Figure 9: Creating the perfect plane from the best-fit line and reference plane.

Alternatively, all the inspection points could be projected onto the perpendicularity datum reference, transferred to Microsoft Excel, and a linear regression performed on the data points. The best-fit line could then be transferred to Inventor and modeled. However, this technique is more math and time intensive and has the potential of clouding the learning process, and therefore was not chosen as the most suitable technique.

Inspection points may lie on either side of the simulated best fit surface, as seen in Figure 9. At this point the Inventor measurement tool can be used to measure the variance of the inspection points with respect to this best fit plane. However, this tool always returns a positive scalar distance and direction is not considered. In cases when the variation is so small and the inspection point location is visually unclear, these scalar values alone are not enough to calculate the difference between extreme data points. To avoid this scenario, an offset plane is created to eliminate the need for a direction vector.

A second inspection plane is created parallel to the first inspection plane. This plane is offset by some value greater than the maximum variation seen in the feature, so that all points occur on the same side of the plane. In the laboratory, a value of 20 mm is selected for the offset. The distance between the inspection points and the offset plane is then calculated using the Autodesk Inventor measurement tool. This procedure eliminates the need for a directional measurement. Microsoft Excel is then used to calculate the maximum variation between two most extreme distances, and this value is compared against the perpendicularity tolerance value. A schematic of the measurement process can be seen in Figure 10.

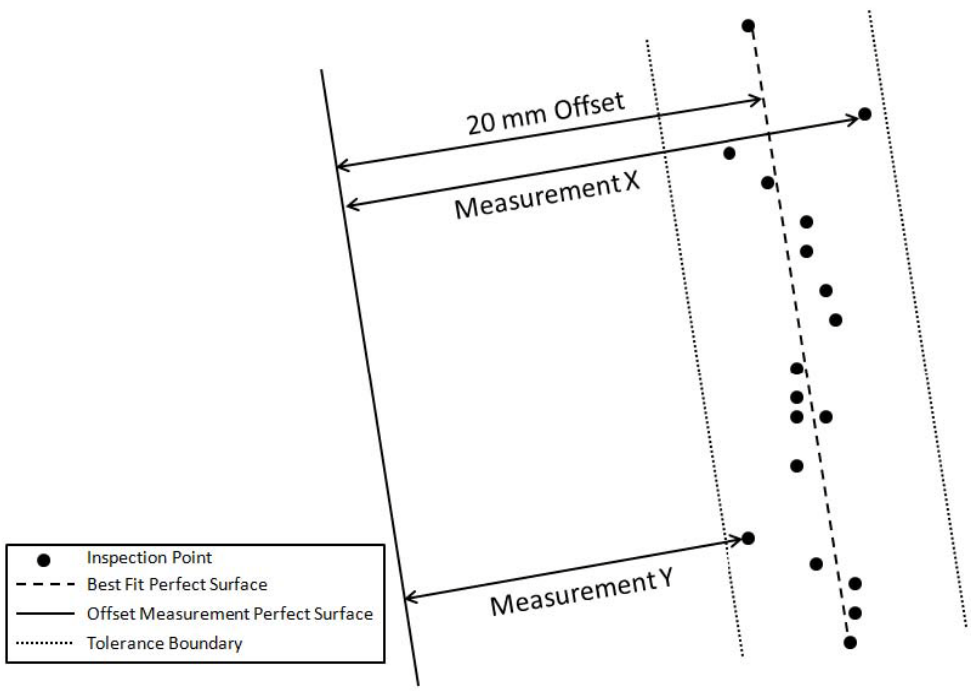

Max Variation = (Measurement X – Measurement Y) ≤ Tolerance Value

Figure 10: Schematic of the perpendicularity inspection process with an offset plane.

Flatness Tolerance Inspection Procedure Development

The inspection process for flatness again begins by fixturing the imperfect block to the inspection table, synchronizing the CMM with Inventor, and taking inspection points. The form tolerance class differs from the other tolerance classes in that no datum reference feature is needed for control. Once the data points have been taken, any combination of three points can be used to form the reference plane for inspection. To capture variation across the entire surface, three evenly spaced points are used to form a perfect datum plane, as seen in Figure 11. This avoids capturing variation on just one corner or section of the surface. This is another approximate approach adopted for this laboratory, but frequently in industry different algorithms or techniques are used for a more precise process.

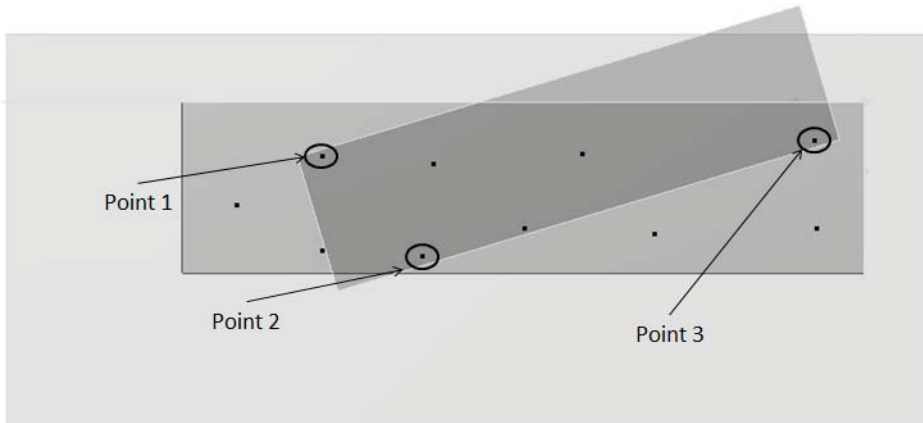

Figure 11: Top View of CMM inspection points and perfect plane. The plane takes no particular orientation with respect to the perfect part. This is because the flatness tolerance controls no degrees of freedom.

Once the datum reference plane is established, another inspection plane is created parallel to the first inspection plane with an offset larger than the maximum variation in the surface. This is similar to the technique used during the perpendicularity inspection process, so that confusion over the direction of the point to plane measure is avoided. All the inspection points are then measured against this offset plane and their values entered into a spreadsheet. As with the perpendicularity tolerance, the spreadsheet calculates the maximum variation between points, and compares this value to the flatness tolerance value.

True Position Tolerance Inspection Procedure Development

In most applications the true position tolerance is typically applied with a material condition modifier. There are three material condition modifiers: 1) maximum, 2) minimum, and 3) regardless of feature size (RFS). The maximum and minimum material condition modifiers combine the actual size of the feature and the tolerance value to further refine or expand the allowable boundaries. However, to avoid additional confusion, in this laboratory all true position tolerances are added RFS, so the bounds are not refined. This is done so that only the general rules of a true position tolerance are considered, while additional rules are avoided. If interested, the ASME Y14.5-1994 geometric tolerance standard can be consulted to expand on the basic notion of a true position tolerance [2]. Additionally, in the laboratory exercises the only feature considered for a true position tolerance is a cylinder or hole.

In order to inspect the true position tolerance of a cylindrical feature (i.e. an extruded cylinder or a hole), the two-dimensional three point circle function from the HighRes plug-in package is used. This feature allows the user to select three points on a cylinder or hole, and the software forms a circle from these three data points.

To begin the process, the imperfect block is fixtured to the inspection table according to the datum reference frame, the perfect block is opened in Inventor, and the CMM is synchronized with Inventor. The three point circle command under the HighRes plug-in tab is then used to capture the two defining circles on the cylinder or hole of interest. Three data points are taken around the first circle at the base of the cylindrical feature, as seen in Figure 12(a), and three points are taken on the second circle at the top of the cylindrical feature, as seen in Figure 12(b).

(a) Base circle of the cylinder

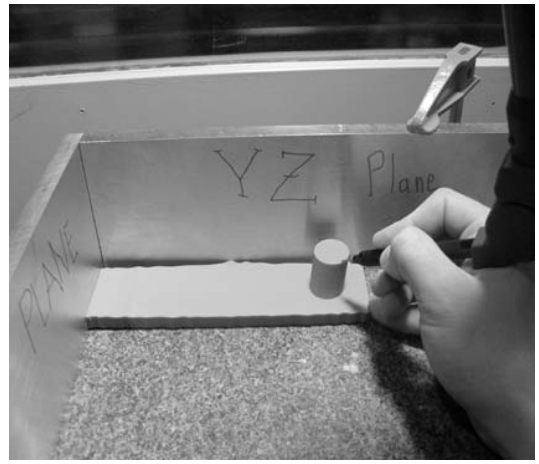

(b) Top circle of the cylinder

Figure 12: Taking inspection points on the (a) base circle and (b) top circle of the cylinder.

After the data is taken, two circles appear in the Inventor window that simulates the size and location of the base of the cylinder and the top of the cylinder, as seen in Figure 13.

Figure 13: The base circle and top circle.

The two center points of these circles represent the start and end points for the actual axis of the cylindrical feature. This axis must fit within a perfect cylinder having the diameter of the tolerance zone, and is located by basic dimensions on the engineering print. This can be seen in Figure 14.

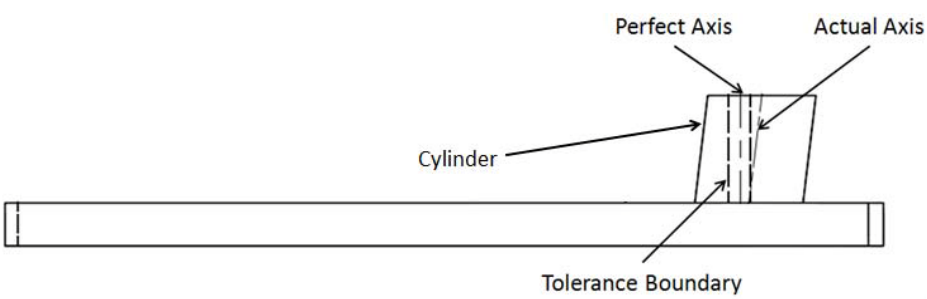

Figure 14: The boundary zone for the true position tolerance.

To create this boundary zone, the sketch tool is used to create a circle on the same plane as the inspection circles. The size and location of this boundary zone will be called out by the engineering drawing of the part under inspection. To verify that the cylindrical feature meets the

tolerance requirement, the center points of the inspection circles (i.e. the axis of the cylinder) must fall within the diameter of the boundary circle (i.e. the cylindrical tolerance zone). The top view of the inspection circles and boundary circle can be seen in Figure 15.

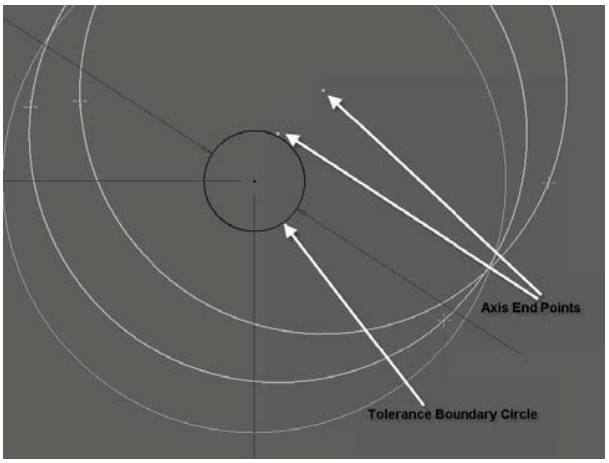

Figure 15: Examining the inspection points and the tolerance boundary.

Lab Unit 1 Assignment A-Datums and Manufacturing Variation

A series of engineering drawings of a rectangular block are provided to students to introduce, explain, and demonstrate the functionality of datums. The first engineering drawing, seen in Figure 16, only contains a dimensional tolerance on the height dimension, 50 mm, with no datums incorporated. The tolerance on the height dimension of the block is large enough, ±5 mm, so that the allowable variation is evident through visual examination of the part.

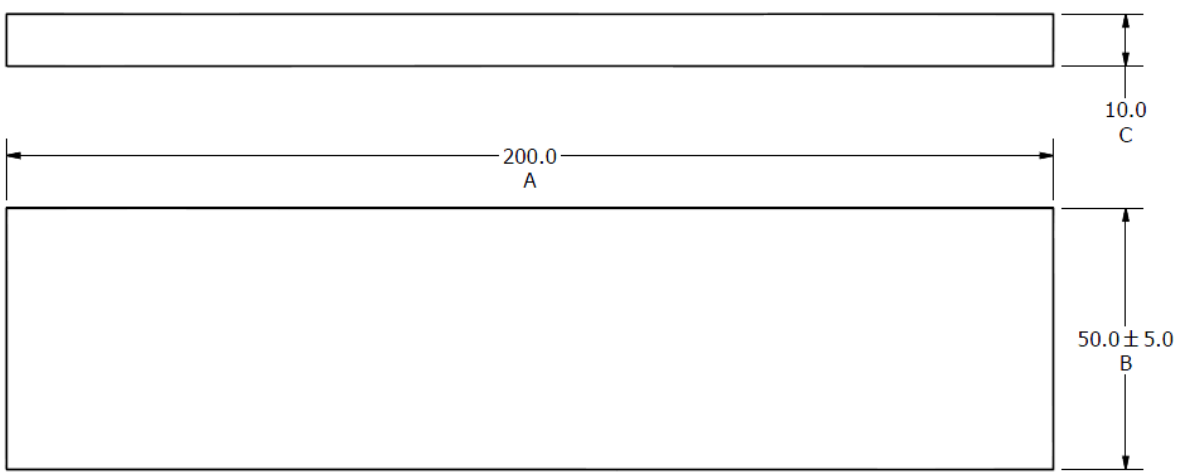

Figure 16: A basic engineering drawing of a rectangular block with a dimensional tolerance on the height.

The idea behind magnifying and exaggerating the defects in the part is to allow students to easily grasp the concept of manufacturing variation. Accompanying the imperfect block is a design criterion stating that when the block is resting on a table with the 50 mm height dimension in the vertical direction, the block should be no taller than 55 mm and no shorter than 45 mm. An example of this criterion can be seen in Figure 17.

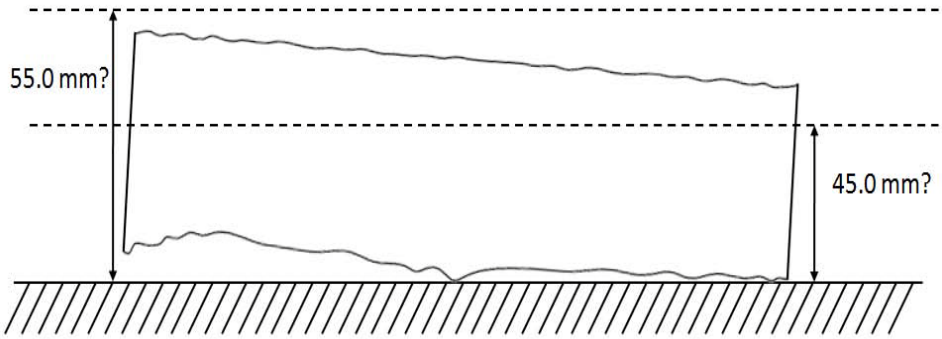

Figure 17: Design criterion placed on imperfect rectangular block.

A worksheet accompanies assignment A. This worksheet is loosely guided, and there are various exercises involving free measurement of the block with calipers and fixed measurements of the block with the CMM. This provides an opportunity to practice fixturing techniques and also demonstrates how measurements change with different fixturing. Additionally, different versions of the block are produced with the variation located in different areas and the same set of measurements is repeated. Ultimately, this leads the student to the realization that in some measurement configurations the block passes the functional requirement but in other configurations the block does not. This exercise is designed to demonstrate to students the necessity of specifying measurement baselines or datums and the need for greater control than that provided through dimensional tolerances.

Lab Unit 1 Assignments B and C: Tolerance Inspection
Two additional engineering drawings and imperfect blocks are used for assignments B and C. The engineering drawings can be seen in Figures 18 and Figure 19.

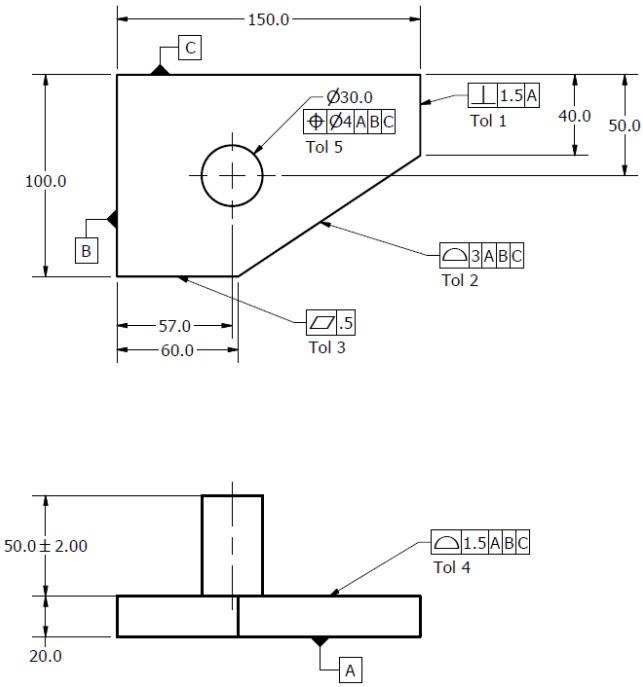

Figure 18: Engineering drawing of Part 2.

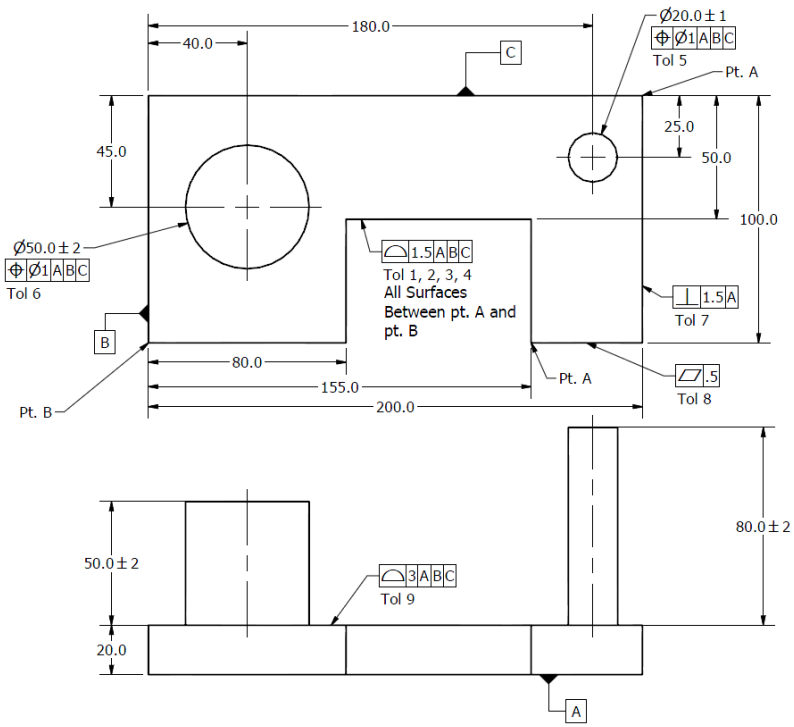

Figure 19: Engineering drawing of Part 3.

The intent of lab assignments B and C is to provide an opportunity to physically explore the meaning of the various geometric tolerances indicated on the drawings. Each tolerance has an accompanying set of questions about the tolerance zone shape, perfect feature, datum reference frame, whether the feature passes inspection, and the amount manufacturing variation the feature contains. To answer the latter two questions the part must be fixtured appropriately, data must be taken with the CMM, and tolerance boundaries must be constructed in Inventor.

Lab Unit 2: Reflecting design intent through the use of geometric tolerancing
Explaining design intent through a set of rules is very difficult, if not impossible to do, so the concept is presented with an example. In the explanation of this example, different design criteria are presented, and then translated into a datum scheme and a fully toleranced drawing. A second example is then provided as an independent study, where new design criteria must be interpreted with a datum scheme and a set of tolerances.

Lab Unit 2 Lecture: Engineering Drawing for Machine Blank
A simple machine is modeled in Inventor, and the rectangular block from Lab Unit 1 now becomes a blank that is to be inserted into a simple machine, seen in Figure 20.

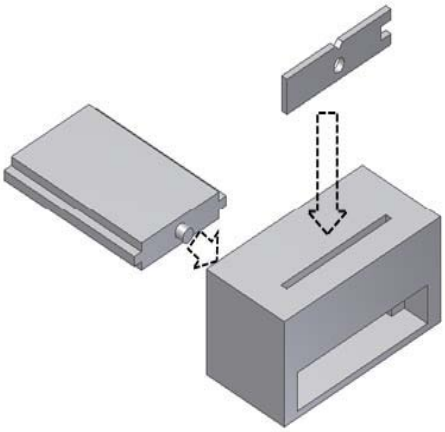

Figure 20: Design scenario used for Lab Unit 2.

In order for the blank to be used in the manufacturing process, it must pass certain functional requirements. While the basic engineering drawing of the design may seem quite simple, the emphasis in the example is placed on transforming the design requirements into either datums or geometric tolerances. Throughout the exercise, the basic engineering drawing is updated with datums and geometric tolerances derived from the different requirements placed on the design. The end result of the exercise is a fully toleranced engineering print. This example demonstrates how design requirements can be communicated through geometric tolerances and how any individual trained in GD&T, without any additional explanation from the designer, can interpret the final product.

Lab Unit 2 Assignment A: Practice Reflecting Design Intent through Geometric Tolerances
The assignment for this laboratory is another design scenario, complete with a basic engineering drawing and design requirements. The scenario can be seen in Figure 21.

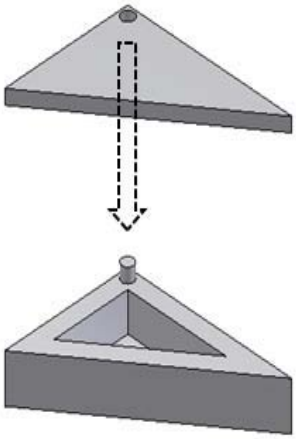

Figure 21: Design scenario 2.

The design requirements must then be reviewed and translated into a fully toleranced engineering drawing. An accompanying worksheet must also be completed. This worksheet contains questions asking which design requirements relate to which tolerances on the drawing. This assignment further exercises the geometric dimensioning and tolerancing skill set, and expands it to a real-world application.

Implementation

In the spring 2011 semester the lab unit 1 materials will be tested in GE101, a first year engineering design graphics course at UIUC. GE 101 is taken by students in general, industrial, civil, agricultural and biological engineering, as well as those studying engineering mechanics.

These materials are designed to be presented in a lecture-lab format. The lecture will include an introduction to GD&T, and also provide information about the CMM, surface table, and the integration of this equipment with Autodesk Inventor. It will also include a lab exercise planned around this information and aimed at testing student knowledge of GD&T. Through this exercise, it should become clear to what level students are grasping the concepts of GD&T. The only drawback to this approach is that these exercises are suggested to be completed in groups. So one individual could potentially carry the entire group and an accurate reading of each members understanding would not be possible.

Conclusions

Geometric dimensioning and tolerancing is a fundamental engineering tool used in many industries that allows different groups to communicate effectively and efficiently. Due to the importance of GD&T, it is essential for new engineers entering industry to be aware of the tool, and if possible develop some level of proficiency. Unfortunately, due to its complex rule based nature, the topic is in general only briefly mentioned or not covered at all in academia. The goal of this work is to present GD&T using a visually based method, and then to provide opportunities to practice the material. As an added benefit, additional tools are incorporated into the program so that multiple topics are covered simultaneously.

Specifically, the program uses a portable CMM, parametric modeling software, and a three-dimensional printer to simulate a manufacturing and quality inspection scenario. A series of parts are created with manufacturing variation, and students are asked to measure these parts using a variety of techniques. Using these different techniques, students are able to understand the importance of datums, and also the difference between standard dimensional and geometric tolerances. The laboratory exercises walk students through four kinds of geometric tolerances, including: profile, orientation, form, and position, and then demonstrates different variational controls within each tolerance class. The final set of laboratory exercises provide students with a list of functional requirements that must then be translated into a datum scheme and a fully toleranced drawing. By using an interactive format, the goal of these exercises is to present the material in a stimulating matter so that students can learn the basic aspects of GD&T.

Although geometric dimensioning and tolerancing is not a new topic, it continues to gain more emphasis in industry as companies attempt to save on manufacturing costs, and to be more environmentally friendly through the elimination of manufacturing waste. While the topic is a difficult one to teach in academia, engineering programs should not underestimate its importance or avoid including it in their curriculums. While the traditional rule-based method for teaching GD&T can be successful, it is not always the most time effective and does not demonstrate how this tool is used in industry. Continued development of these types of interactive programs will not only allow students to be exposed to GD&T, but will also allow them to appreciate the importance of the topic, and how it is used in industry. This allows schools to continue to provide a service that has a direct benefit to both students and their employers.

Recommendations

GD&T is an immense topic and this project is only designed to provide a brief overview of geometric tolerances and how they are used. However, there are a few aspects of this program that can be expanded upon to deliver even more benefit to student.

In the 2011/12 academic year the other lecture-lab materials should be tested. This could be in GE 101, or perhaps in another course. The lab unit 2 lecture covers design intent and the implementation of GD&T. The lecturer steps through a list of engineering requirements, and demonstrate how to convert these requirements into geometric tolerances and a datum scheme. This exercise is meant to show how to convey design intent through an engineering drawing and also to reinforce GD&T concepts. To test student knowledge, an assignment has been created that simulates the design scenario introduced in the classroom. Through these two tasks, the instructor should be able to gauge how well students grasp the concept.

Additionally, questions can be included on future exams that cover some of the concepts introduced here, and this will provide another avenue for data collection to evaluate the effectiveness of the program. To get direct feedback from students, a survey could be given to assess their level of comfort with GD&T. Through this feedback, the effectiveness of the original program can be judged.

References

[1] M. Henry, "Interview," 2010, Statistical Tolerance Analysis Team Leader - Caterpillar, Inc.

[2] The American Society of Mechanical Engineers, Dimensioning and Tolerancing Standard ASME Y14.5M -1994. New York, New York: The American Society of Mechanical Engineers, 1995.

[3] E. Max Raisor. Engineering Graphics Principles with Geometric Dimensioning and Tolerancing. Schroff Development Corp, Mission, KS, 2002.

[4] Al Neumann. Geometric Dimensioning and Tolerancing Workbook. Society of Manufacturing Engineers, Dearborn, MI, 1995.

[5] L. E. Carlson and J. C. Trabert, "Virtual cad parts to enhance learning of geometric dimensioning and tolerancing," in Proceedings of the 2005 American Society for Engineering Education Annual Conference & Exposition. American Society for Engineering Education, 2005.

[6] ReverseEngineering.com, "HIGHRES CAD Integrated 3D Reverse Engineering Plug-ins," specification Sheet.

[7] Todd Grimm. 3d printer dimensional accuracy. Time-Compression Technologies, 13(5):1–4, September/October 2005.

[8] Immersion. MicroScribe G2 Desktop Digitizing Systems User's Guide.