AC 2011-2498: OPTIMAL DESIGN OF A PUMP AND PIPING SYSTEM

Curtis Brackett, Bradley University

I am a senior mechanical engineering major at Bradley University in Peoria, IL. I am originally from Aurora, IL. I am the team captain for Bradley's Formula SAE senior project. I am very interested and plan on developing my career in the field of energy generation.

David Zietlow, Bradley University

Professor of Mechanical Engineering at Bradley University

The primary author is Curtis Brackett, candidate for BSME May 2011

Optimal Design of a Pump and Piping System

Abstract

The primary objective of this design project is to provide an opportunity for undergraduate students to integrate engineering measurements and modeling techniques to accurately predict *a priori* the optimum pump size, pipe diameters, and wall thicknesses of a pump and pipe system given specified flow rates and lengths of piping. A secondary objective of this design project is to provide students with an opportunity to improve team and technical skills while grouped into small teams. The teams are challenged to predict the pipe diameters and pump size used to serve two parallel branches of a piping system.

The experimental apparatus is a pre-developed system that includes three different size pumps and the two branches of pipes with each branch having its own flange to accept different size orifices. The orifices are used to represent the optimum pipe diameters. Students are to determine the optimum pipe diameters through an analytical model of the system. The students also use experimental techniques to test and measure the specified flow rates and pressure drops of the system for different combinations of pumps. To add to the realism of this design experience, the students are given imitation money that is used to buy materials (orifice plates) and services (system test time, professor guidance, and engineering time). The final grades are based on the analytical model, results from the experiments, cost of the project, and the performance of the final pump and pipe system when compared with the analytical model.

This design project provides students with a real life example of the design process and shows the importance of employing the engineering design process to the development of a functioning prototype system. One student team's analytical model predicted a total cost of $1,263, which includes the pump cost, present worth of the operating cost, and pipe costs. The size of the pipe to allow the specified flow rates of 10 liters per minute and 5 liters per minute through the two branches of the apparatus had inner diameters of 1.6 centimeters and 1.2 centimeters. In order to demonstrate this correct pipe size, the students created their two orifice plates with 4.4 and 6.3 millimeter holes. When placed in the apparatus, the students used their chosen pump to measure the flow rate across the two orifice plates. The team had flow rate of 9.0 and 6.1 liters per min, a 13% and 18% error respectively. Students noted that this could have been due to the specific and odd hole size needed for the orifice plate. A 0.76% change in orifice diameter would result in a 1.5% change in flow rate. Nine teams of four students completed this project in the spring semester 2010. Eight of the teams were able to produce flow rates within 30% of the target flow rate. Additionally six of the teams were able to predict the power consumption of the pump within 30%

Introduction

Pumps and pipes are used in many applications where a liquid needs to be moved from one point to another. A common application has a pump moving heated or chilled water from the central plant to a network of heat exchangers. The objective of this scaled design project is to provide an opportunity for the undergraduate students to integrate the engineering measurements and modeling techniques to accurately predict *a priori* the optimum pump size, pipe diameters, and wall thicknesses given specified flow rates and lengths of piping. Industry requires engineer to model a system before they are allowed to perform experiments. After developing an analytical model, the students are expected to define and conduct experimental test plans that provide necessary and sufficient data to improve the accuracy of the analytical model. Once the analytical model is improved through testing, the students commission their design by fabricating orifice plates that will be used as a substitution of the actual piping.

This project integrates the knowledge learned from a variety of undergraduate courses including fluid dynamics, strengths of materials, technical writing, and engineering economics. Students' coursework is generally focused on the subject they are enrolled in, and it was our goal to give students a real life situation that would cause them to think outside of one course's curriculum. It is also important for future engineers to understand the necessity of economics into their design work.

It is also important to realize that as today's design challenges become more difficult, it is necessary to develop the ability to work as a balanced team that depends on each other to meet the goal set by the customer. This design project uses a basis of individual specialties to compile teams of four members of junior and senior status. Specialties include analytical model formation, experimental measurements, prototype preparation and assembly, and report writing. Though each member is selected based on their specialty, it is important for the students to realize that they will still have to work together to successfully complete the project.

Members of each team will develop team skills throughout the project. Having meetings with your teammates is a necessity to accomplish all tasks set throughout the project timeline. Members of the team develop the skills necessary to work effectively in such teams, preparing them for their senior year capstone project. Each member of the team has their own specialty and aspect on the project. Prior to this design project one lab session is devoted to a team building exercise where the students learn the essential components to successful teamwork.

The project is divided into three sections that are intertwined and necessary to meet the desired outcome for the pump and pipe system. The first report the students will be required to accomplish is the analytical model. The analytical model will predict different pump sizes for varying pipe sizes. The model will show the cost of all possibilities of pumps and piping sizes. With all costs available, students will be able to choose an initial pump and pipe size by minimizing the total cost of the system. The next report is the experimental report which involves testing of the existing pump and pipe system to develop the actual system curve and compare results to the developed analytical model. For the final report the students fabricate orifice plates that will represent the optimum piping to the branches involved in the design. The orifice plates will be based off of a modified analytical model using the system curve developed experimentally.

This design project incorporates many goals that an educator wants to accomplish in a lab-based class. Involving engineering economics in this project is a great way to bring the real world into the class room. The optimal design of a pump and piping system lab is a great way to incorporate numerous classes into one piece of work.

Pump and Pipe Apparatus

For this project it is necessary to build a system that is capable of allowing students to choose from a variety of pump and piping sizes and allow the students to demonstrate their final design for the commissioning. A system schematic is contained in Figure 1.

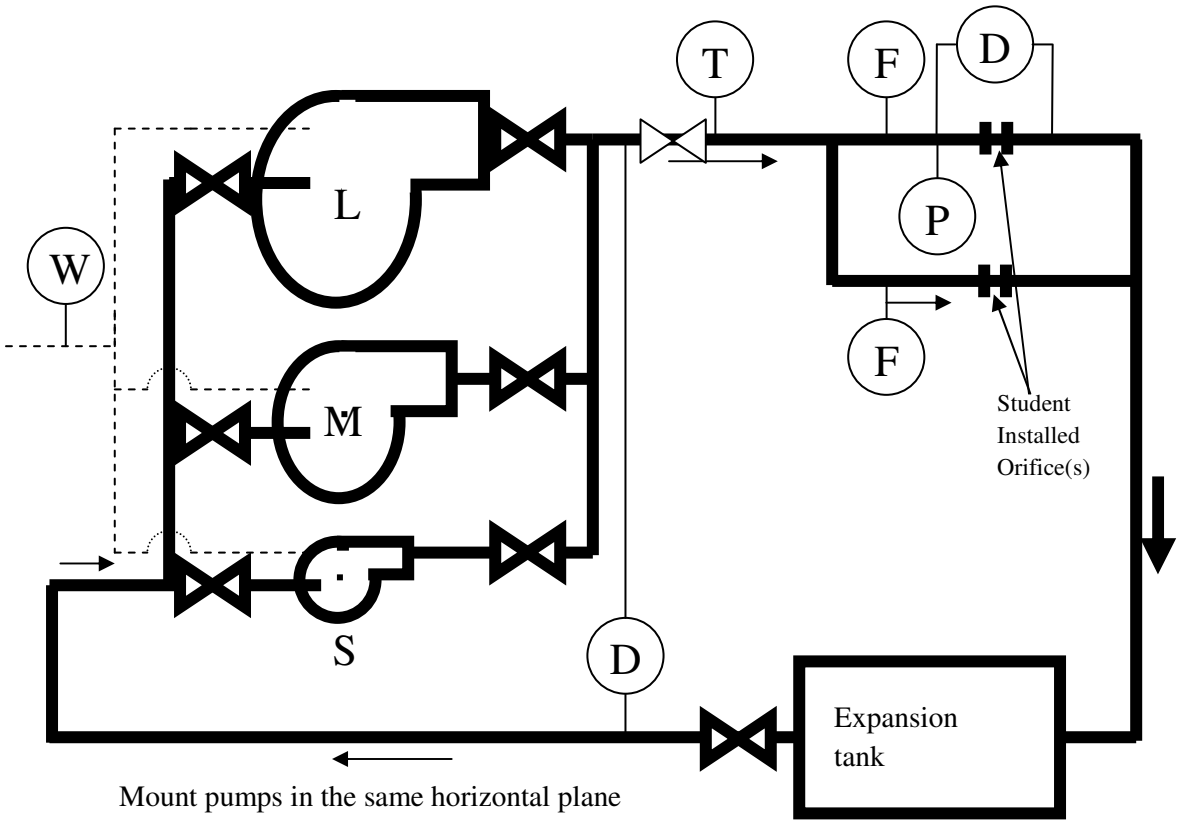

Figure 1: Pump and Pipe System Schematic

The system schematic shows the apparatus that was developed which includes three pumps of different sizes, denoted as small, medium, and large. The parallel piping branches contain the orifice plates to represent the optimum pipe diameters. Throughout the apparatus is a

variety of monitoring that is connected to the data acquisition system. A watt meter, W, is used to monitor the energy used by the pumps. Differential pressure transducers, D, are use to monitor the pressure drop across the orifice plate on the upper branch and the pressure drop of the system. A thermocouple, T, and a pressure transducer are used to determine the temperature and pressure of the fluid in the piping for more accurate density calculations. Each branch is equipped with a flow meter, F.

The pump and pipe system developed has an initial cost of roughly $5,000. This includes all the material used, valves, orifices, expansion tank, monitoring equipment, and the data acquisition system. The apparatus was assembled by graduate students in the mechanical engineering program. The final apparatus may be seen in Figure 2.

Figure 2: Pump and Piping Apparatus

Analytical Model Report

The first task of the students is to develop an analytical model of the pump and piping system using EES, Engineering Equation Solver[1]. A review of the relevant topics from fluid dynamics is provided for the students in a lecture format. The students determine the necessary inputs to optimize the pump and pipe system and formally request any additional information they have not received. This includes the manufacture's pump curves and all information about the already constructed apparatus that is unknown. The students use their analytical model to show the optimums and plot how the initial, operating, and total costs vary with pipe diameters and identify the optimum design. In doing this, they assume infinitely variable pumps and pipe sizes. The students must also determine the orifice plate diameters that will represent the optimum pipe sizes for both branches of the system.

As the diameter of a pipe increases, the size of the pump and corresponding operating costs decrease. The optimum is found in the trade-off between the initial cost of the pipe and the operating and initial costs of the pump. The total cost of the system, *TC*, ($) is the sum of the

initial cost of the system, IC, ($) and the present worth of the operating cost, OC_{pw}, ($) as seen in Equation 1.

$$TC = IC + OC_{pw} \tag{1}$$

The initial cost of the system, IC, includes the cost of the pump to be purchased, IC_{pump}, ($) and the cost of piping material, IC_{pipe}, ($) seen in Equation 2.

$$IC = IC_{pump} + IC_{pipe} \tag{2}$$

The initial cost of the pipe is dependent of the mass of material used, M_{pipe}, (kg) and the cost of material per unit mass, C_{um}, ($/kg) as seen in Equation 3.

$$IC_{pipe} = M_{pipe} C_{um} \tag{3}$$

The mass of pipe is calculated by volume of material, V_{pipe}, (m^3) used multiplied by the density (kg/m^3). The volume of the pipe material is defined by the geometry of cylinders as shown in Equation 4.

$$V_{pipe} = \frac{\pi}{4}\left(D_o^{\,2} - D_i^{\,2}\right)L \tag{4}$$

where D_o and D_i are the outer and inner diameter of the pipe, respectively, and L is the length. This needs to be calculated for each branch. In order to obtain the internal diameter of the second branch the fact that the pressure drops in parallel branches are equal will need to be used.

The inner diameter of one piping branch is the independent variable of the system. The piping in the system has to be able with stand the stress from the water pressure and an additive factor of safety. To determine the thickness of the piping, th, to meet those needs the hoop stress[2] equation is used and can be seen in Equation 5

$$\sigma_{\max} = \frac{P_{\max} D_{i,u}}{2 * th} \tag{5}$$

where σ_{max} is the maximum allow stress in the piping material, P_{max} is the maximum allow pressure of the fluid in the pipe, and $D_{i,u}$ is the inner diameter of the piping material in the upper branch.

With the internal diameter of the pipe for one branch specified, students can move to the fluid flow properties in order to determine the pressure drop of the fluid. The first steps in developing the piping pressure require the students to acquire the Reynolds number and friction factor for a given pipe and pipe diameter. The Reynolds[3] number is dependent of viscosity (Pa*s), diameter (m), density (kg/m^3), and velocity (m/s) and may be seen in Equation 6. The velocity in one branch is determined from the specified volumetric flow rate and diameter. Equation 7 defines the friction factor of fully developed laminar flow, which is dependent of Reynolds number, and the friction factor for fully developed turbulent flow may be seen in explicit formulation by Haaland[4] in Equation 8 and is dependent of Reynolds number, diameter, and surface roughness (m) of the pipe.

$$\mathrm{Re} = \frac{\rho V D}{\mu} \tag{6}$$

$$f = \frac{64}{\mathrm{Re}} \qquad \text{(If Re<3000)} \tag{7}$$

$$f = \left(-1.8\log_{10}\left(\frac{6.9}{\mathrm{Re}} + \left(\frac{\varepsilon/D}{3.7}\right)^{1.11}\right)\right)^{-2} \qquad \text{(If Re≥3000)} \tag{8}$$

Following the acquisition of the calculated friction factors, the pressure loss due to the piping can now be determined. These losses create a pressure drop (Pa) that is a function of pipe length, pipe diameter, velocity, and density as given by the conservation of momentum[3]. This change in pressure is described in Equation 9 shown below.

$$\Delta P = f\frac{L}{D}\frac{\rho V^2}{2g_c} \tag{9}$$

The pump manufacturer[5] offers plots that relate head (m) and work (kW) input to the volumetric flow rate (m^3/s) of the pump. Using the manufacturer's plots, students can perform a regression analysis to develop relationships for an infinitely variable pump. With the regression equations and the pressure losses in the piping, the work input can be found and used to develop the operating cost of the system. The operating cost may be seen in Equation 10. Since operating costs are incurred in the future and future money is less valuable than today's currency the time value of money needs to be incorporated in order to compare initial and operating costs. The present value of operating cost[6] may be seen in Equation 11.

$$OC = \dot{W}_{in} \times OT \times C_{ue} \tag{10}$$

Where, OT is the operating time (hr) and C_{ue} is the cost per unit energy ($/kW-hr).

$$OC_{pw} = OC \times \left[\frac{(i+1)^n - 1}{i(1+i)^n}\right] \tag{11}$$

Where, i is the time value of money and n is the lifetime of the system (yr).

With this information and all governing equations, the students have the majority of the information necessary to produce the analytical model for the system. Students must keep in mind that the auxiliary piping already included in the system must be taken into account in the same manner as the new piping that is represented by the orifice plates.

In order to determine the orifice plate diameters an iterative process is performed to find the ratio of orifice diameter to inner pipe diameter, β until the pressure drop across the orifice equals the pressure drop in the optimum diameter pipe. Equation 12 relates flow rate to the orifice discharge coefficient[7], C_o, and β. The discharge coefficient is a function of the diameter ratio, β, and the Reynolds number and may be seen in Equation 13.

$$\dot{V} = C_o A_o \sqrt{\frac{2(p_1 - p_2)}{\rho(1-\beta^4)}} \tag{12}$$

$$C_o = 0.5959 + 0.0312\,\beta^{2.1} - 0.184\,\beta^8 + 91.71\,\beta^{2.5} Re^{-0.75} \tag{13}$$

Using the equations presented the students can develop the analytical model to demonstrate the system with infinitely variable pumps and pipe sizes. All the information developed must be discussed in a formal report and include all of the previously discussed requirements.

Experimental Report

In order to more accurately define their analytical model, the students must test the system with no orifice plates installed. This will allow students to obtain an accurate system curve in place of their previously developed system curve of the auxiliary piping. This report also removes the assumption of infinitely variables pumps, as there are only three to choose from. Students are required to take data from all three pumps and every pump combination at the desired system flow rate and the maximum flow rate available for the pumps and pump combinations. The students will use a valve restriction in order to accomplish the task of obtaining the data at the desired flow rate. This will help the students correlate the manufactures pump curves to actual system conditions.

The experimental portion of the project also allows students to learn how to test equipment more accurately by minimizing the effects of extraneous variables. This is done by taking the data in a random order rather than sequentially. To assure equal accuracy over the range of data Equation 14 is used to determine how many extra data samples are required in the region of high uncertainty.

$$n = \left(\frac{U_h}{U_l}\right)^2 \tag{14}$$

where U_h is the percent accuracy at high uncertainty for a given measurement and U_l is the percent accuracy at the low uncertainty.

The experimental report has additional requirements beside testing and understanding test procedures. The students plot the system curve of the auxiliary piping and compare it to that developed in their initial analytical model. They also plot the pressure rise and pump efficiency as a function of volumetric flow rate for the pumps. The equation for pump efficiency may be seen in Equation 15. The students then replace their auxiliary pressure drop information in their analytical model with the experimental system curve. Using the updated model the cost analysis of the system is performed and the new optimums are identified..

$$\eta = \frac{\Delta P * \dot{V}}{\dot{W}_{in}} \tag{15}$$

where η is the efficiency, ΔP is the change in pump pressure in Pascal, $\dot{V}$ is the flow rate in meters cubed per second, and $\dot{W}_{in}$ is input power in Watts.

Commission Report

The final report is the commission report. This is the accumulation and validation of all the students' work throughout the project. The students commission their design by fabricating a set of orifices that will be inserted into the flanges on the parallel branches of the apparatus and use a pump or pump combination of choice resulting in the minimum total cost. The final test will be documented and the results used as a final comparison of the analytical model.

The commission report includes a summary of all the activities completed and the results of those activities. The student must include a defense of all assumptions made throughout the project. The prediction of the pump and piping system including the auxiliary piping, pressure drop across orifice, flow rate, and power consumption are included and an explanation of any differences between the prediction and the actual performance must be discussed. Students are also required to include an uncertainty analysis the optimum pipe diameters, the orifice diameters, and the overall cost of the system using propagation of uncertainty analysis.

This report also includes a budget summary of all work done by the students. This budget summary includes cost of labor for student work, lab costs for each use of the apparatus, material cost of blank orifice plates, and consulting fees from professors and teaching assistants.

Grading

Students are graded on a variety of criteria. For each report there is a given set of requirements. The student completes all of the requirements and do so according to technical report guidelines. Scoring of the reports and final design may be seen in Table 1.

Reports:		Percent of Class Grade
	Analytical Model	5%
	Design of Experiments	5%
	Commission Design	5%
* Each report based on 100 points		
Criteria:		Number of Points
	Performance	10 pts
	Cost (min cost = high score)	10 pts
	Experimental Error	10 pts
* These points are added to the score of the commission design report for a total of 130 points.		

Table 1: Scoring

The cost portion of the scoring is divided into labor, lab, material, and consulting costs. Students are given replica money to represent allowable costs and the team with the lowest cost

receives the highest score in the cost category for the commission design report. The cost and fee structure may be seen in Table 2.

Labor Cost	$10/hr
Lab Cost	$40/hr
Blank Orifice Plates	$10/plate
Professor Consulting	$80/hr
Teaching Assistant Consulting	$20/hr

Table 2: Cost and Fee Structure

Initial Constraints and Assumptions

The students were given a set of initial constraints for the system's parallel branches. The upper and lower branches had to be approximately 42.5 meters and 30 meters, respectively. The flow rates through the upper and lower branches had to see 10 liters and 5 liters of flow, respectively. The maximum stress allowed in the piping is 100 MPa and a factor of safety of 3 needs to be included. The piping material used is steel with a cost per unit material of $11 per kilogram. The cost of unit energy is $0.10 per kW-hr with a total operating time of 8000 hours. The average time value of money for the desired lifespan of 20 years is 20%.

With this information the students are able to form their analytical model, but a few assumptions about the system conditions need to be addressed. It will be assumed that the water is at room temperature with no heat transfer to or from the water. Initially, an educated decision on the surface roughness of the auxiliary piping needs to be made based on the previous use of the apparatus piping. This guess is then updated with the experimental data. It needs to be assumed that the provided manufacture's pump curves may be manipulated to represent an infinite amount of pumps of similar kind (e.g., centrifugal). The students do so by doing a regression analysis for both initial cost of the pump versus pump head and power in (at the specified flow rate) versus pump head using the manufacturer's pump data for the three pumps provided.

Results

Student's generally do not have much difficulty preparing the initial analytical model. Most of the difficulties revolve around which variables would be best to do the regression analysis. It is best to do a regression analyis on pump head at the desired flow rate and initial cost of each pump to get information that can be generalized and assumed to be applicable to infinitely variable pumps. Comparing pump head to power in can be useful for determine the operating cost for a given pipe diameter. With the manufacturer's pump curves students could use Microsoft Excel to do the regression analysis. Plots of the pump head versus initial cost and pump head versus power in may be seen in Figure 3 and Figure 4, respectively.

From observation, it may be noticed that the pump head versus power in regression analysis is not the most acceptable of regression analysis. This is may be due to only using three points from the manufacturer's pump curves. Additional information could be attained and used for a more accurate analysis.

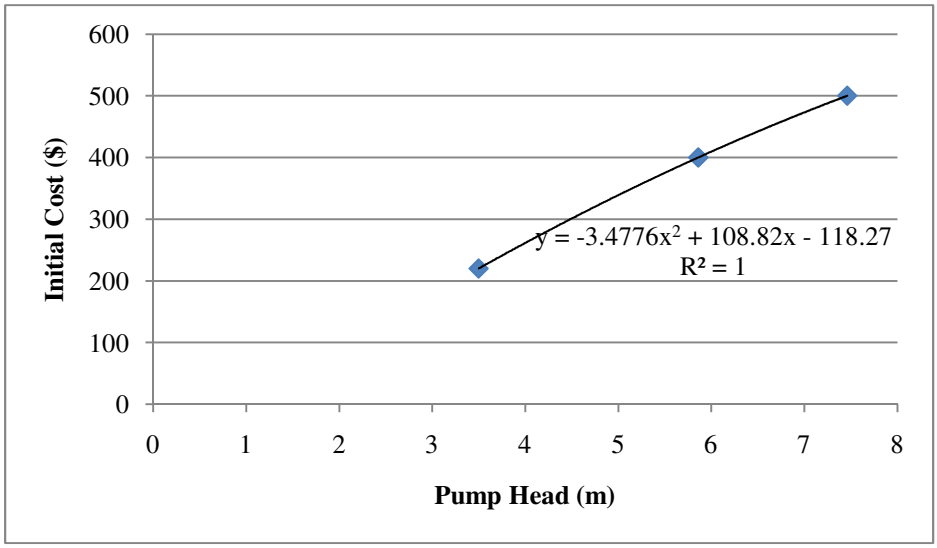

Figure 3: Pump Head versus Initial Cost Regression Analysis

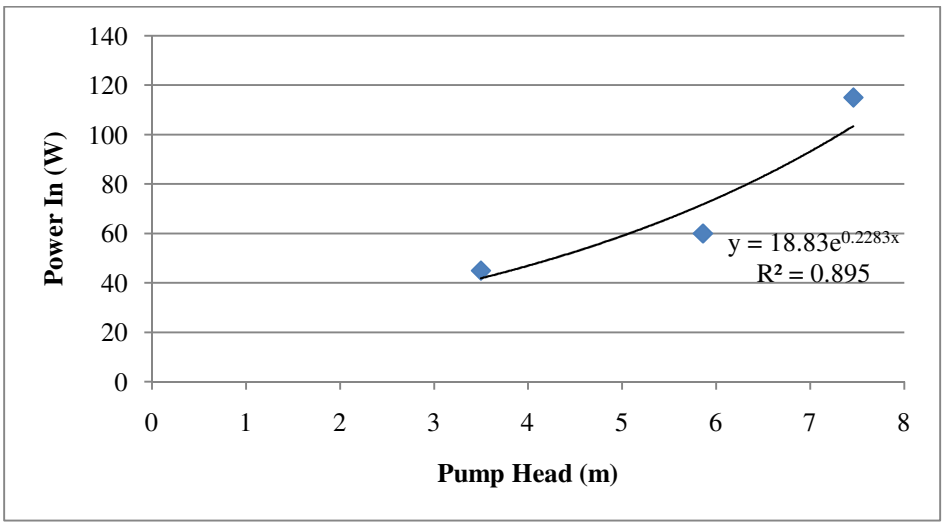

Figure 4: Pump Head versus Power In Regression Analysis

With the regression analysis completed, the students were able to complete their analytical model with a little work with their code in EES. For EES, students must choose the initial guesses and lower and upper boundaries correctly for each variable, or there will be difficulties with convergence.

The experimental lab allows for students to test the apparatus and compare an experimental system curve to their analytical system curve developed from their model. One team's comparison of experimental and analytical system curves may be seen in Figure 5. In this

situation, large error is seen between the two. This discrepancy may have been caused by a variety of both human and non-human errors. Students must measure the piping length and account for each bend, valve, and fitting on the apparatus. Obtaining the correct pressure loss coefficients may be difficult for students when first introduced to piping systems. Also, the judgment based assumption of the surface roughness of the piping may not be close to what is actually seen inside the piping.

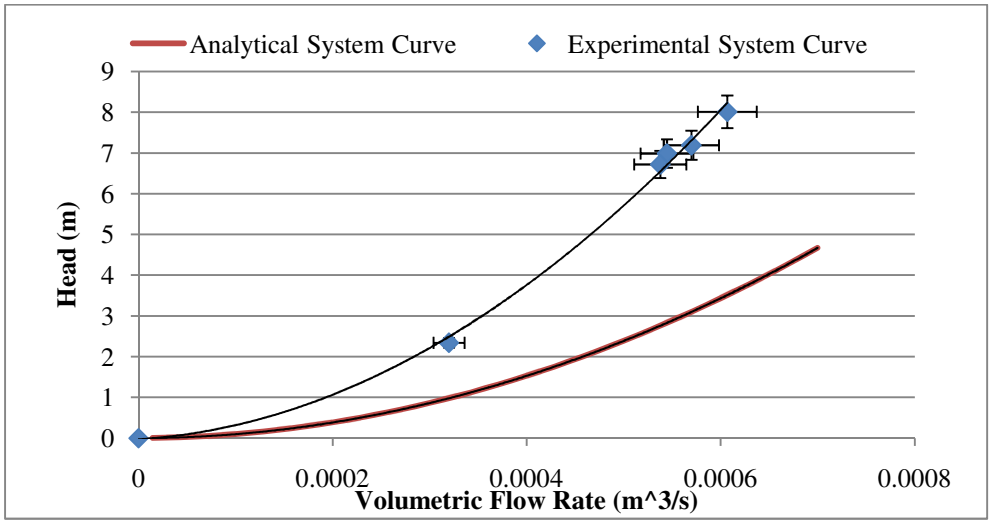

Figure 5: Analytical and Experimental System Curve Comparison

Students were required to use their experimental system curve in place of the analytical system curve when developing their final model. One team's final model predicted a total cost of $1,263 for the total pump and piping system with upper and lower branch inner diameters of 1.6 centimeters and 1.2 centimeters. Figure 6 shows how total, initial pipe, initial pump, and present worth operating cost vary with the inner diameter of the lower branch.

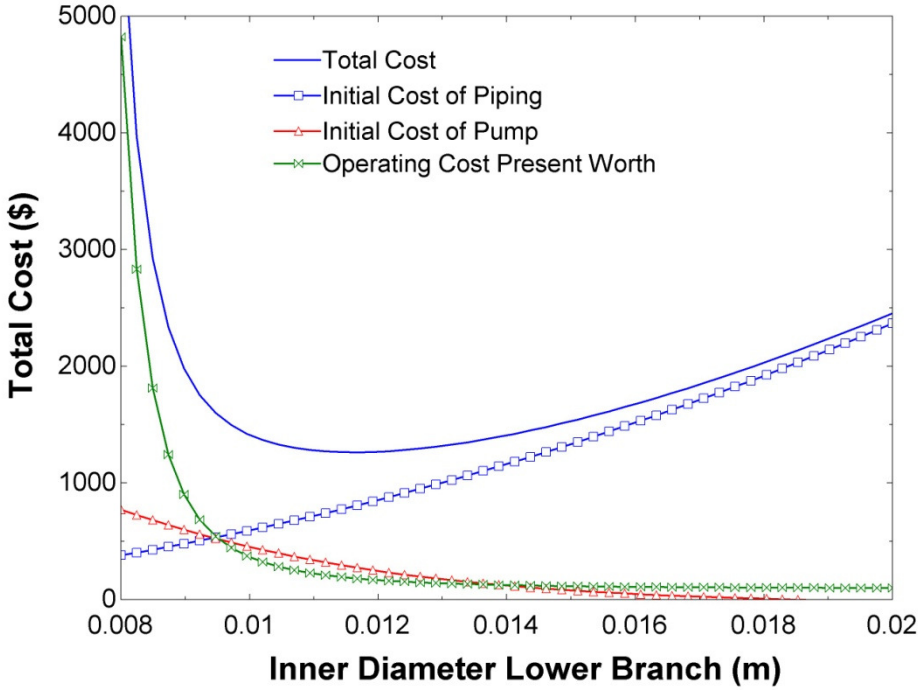

Figure 6: Cost versus Inner Diameter of the Lower Branch

In order for the students to commission their design, they must use the pumps that are readily available. This team's analytical model prediction allowed for the use of the small pump for this application. The students model predicted the need for orifice plates with hole diameters of 4.4 and 6.3 millimeter. The results of the final test may be seen in Table 3. Small changes in these orifice diameters can result in drastic changes of flow rates in the upper and lower branches. Discrete drill sizes do not match precisely with the analytical model predictions.

	Flow Rate Upper (L)	Flow Rate Lower (L)	Power Consumption (W)
Prediciton	10.00	5.00	45.0
Actual	8.97	6.13	40.9
Error	11%	18%	10%

Table 3: Commission Design Final Test-Featured team

There were nine teams of four students who performed this design project in the Spring semester of 2010. The results of the remaining eight teams are summarized in Table 4. The results are given in the percent difference between the analytical model and what was measured experimentally during the commissioning. From 2007 to 2010 nearly 130 students completed this design project.

Team	Flow lower branch (%)	Flow upper branch (%)	Orifice Diameter lower (%)	Orifice Diameter upper (%)	Pump power (%)
1	-22.353	-20.958	4.7345	1.4603	-3.4896
2	-30.159	4.7619	-6.6658	-0.0104	1.1765
3	-27.869	35.385	0.5932	0.5932	-39.206
4	-30.159	7.3171	-3.7949	-2.2631	-2.3923
5	-19.512	-19.512	-4.195	-0.5705	337.59
6	0	-8.9655	-0.2625	-1.0124	-29.59
7	-25	7.3171	-3.9754	-2.0993	-2.9126
8	428	74.834	-3.243	-1.0764	15.69

Table 4: Commission Design Final Test-Remaining 8 teams

Conclusions

Feasibility of conducting an optimization of a pump and piping system with two branches has been demonstrated. Juniors in a mechanical systems laboratory class were able, in teams of four, to develop an analytical model, conduct experiments, and commission their design. The exercise integrates subjects from fluids (e.g. frictional pressure drop, pump curves, parallel circuits), technical writing, and engineering economics.

For the pipe system presented here the optimum pipe diameters were 1.6 and 1.2 centimeters for the upper and lower branches respectively. The balance between the initial costs of the piping and the operating and initial costs of the pump produces a minimum total cost of $1,263 at the optimum.

One recommended improvement to this project would be to replace the three pumps with one and install a variable speed drive to the motor of the pump. This will allow for the students to validate their analytical model with an infinitely variable pump rather than be limited to three discrete pump sizes. It also will allow the pressure taps, used to measure the pressure rise in the pump, to be located closer to the pump inlet and outlet.

References

[1] Klein, S.A., "Engineering Equation Solver", (1992-2010), F-Chart Software, www.fchart.com

[2] Budynas, R. G. and Nisbett, J. K., (2011), *Shigley's Mechanical Engineering Design*, 9th Edition, McGraw-Hill, Page 114.

[3] Munson, B., Young, D., and Okiishi, T., (2006) *Fundamentals of Fluid Mechanics*, 5th Edition, John Wiley and Sons, Inc.

[4] Haaland, S.E., "Simple and Explicit Formulas for the Friction Factor in Turbulent Pipe Flow," *J. Fluids Eng.*, March 1983, pp. 89-90.

[5] "Magnetic Drive Pumps," Iwaki America (accessed February 11, 2010), Available at: http://iwakiwalchem.com/products/wmd.htm

[6] Eschenbach, T., Lavelle, J., and Newnan, D., (2009) *Engineering Economic Analysis: Enhanced*, 10th Edition, Oxford Press, USA

[7] White, F.M., (2003), Fluid Mechanics, 5th Edition, McGraw-Hill.