Table-Top Robotics for Engineering Design

Vincent Wilczynski, Gregg Dixon, Eric Ford
United States Coast Guard Academy

Abstract

The Mechanical Engineering Section at the U.S. Coast Guard Academy has developed a comprehensive activity based course to introduce second year students to mechanical engineering design. The culminating design activity for the course requires students to design, construct and test robotic devices to solve an engineering challenge. Teams of students are provided with a standard kit of parts consisting of metal hardware and fasteners, motors, connecting wires and a programmable remote control system. The teams use these materials to design and construct robotic devices that accomplish a simulated maritime mission. The kit of parts is reusable each year and requires little machine-shop work to create machines, thereby making this project ideal for repeated use. The experience is modeled on the capstone design activity and contains many attributes of the final design experience. The U.S. Coast Guard Academy has been the only program using this commercially available kit of parts and has worked with the vendors to improve the system as a tool for engineering design education.

Introduction

Providing engineering undergraduates with a sound introduction to the fundamental tools for success in their major continues to be a challenge for educators. Engineering educators have been reminded of the need to strengthen this aspect of the curriculum in numerous studies and by the very standards that are used to accredit our programs. For design education to be effective, design tools must be introduced early in the curriculum, reinforced in fundamentals courses, and demonstrated in capstone projects.[1]

At the U.S. Coast Guard Academy the sophomore level course *Introduction to Mechanical Engineering Design* has been developed to provide students with an initial introduction to fundamental topics that will be applied in their upper-division courses. These topics include the engineering design process, engineering economics, risk based decision-making, engineering ethics, and solid modeling. In addition to these topics, experience is gained in working in teams and using common shop tools and equipment. The course consists of two hours of lecture and three hours of laboratory work each week. The typical class size is 24 students with lab sections of 12 students.

Three major activities are used as lab projects associated with this course. Solid modeling and an introduction to machining tools and techniques occupy two-thirds of the lab[2]. A table-top robotics project is used to practice engineering design for the last third of the semester. During the design segment of the course, lectures introduce an engineering design process consisting of establishing a need, developing a concept, refining prototypes and producing a detailed design[3]. Students in the course are challenged to apply the design process to solve a small engineering design problem: given a set of parts, create a solution to accomplish a task.

In this case, the parts are the EduRobotics Rapid Prototyping Kit produced by Innovation First, Inc (*www.innovationfirst.com/eduRobotics*). This kit is an electro-prototyping kit for building small machines and operating those machines using wireless remote control. The kit includes the mechanical, electrical and control components for building remotely controlled electro-mechanical systems. This paper describes how this kit is used as a design activity in the U.S. Coast Guard Academy course *Introduction to Mechanical Engineering Design*.

The Challenge of Design

"Scientists study what is. Engineers create what never has been." These words by Von Karmen describe the essence of engineering. Though design education and design practice are of paramount importance to include in the engineering curriculum, incorporating design in the curriculum is a real challenge.

To be successful, design problems must be realistic, open-ended and have more than one solution. For design problems to be successful components of the undergraduate curriculum the design problems must have an achievable solution, and often so in a short period of time. Many engineering educators have examined methods to incorporate mechanical engineering design into the curriculum and the topic of electro-mechanical robotic devices has been shown to be a captivating approach for students and faculty [4, 5, 6, 7, 8].

The U.S. Coast Guard Academy Mechanical Engineering Section has used robotics as a design tool for nearly a decade. Our experience ranges from engineering outreach robotics activities with high school seniors to capstone robotics projects. We have been using table-top robotics using the EduRobotics kits since 2001 and have found the kits to be an effective tool for introducing engineering design. This kit is useful since the materials are easy to work with, the electronics are sophisticated yet simple to use and the programmable robotic control systems are reliable.

EduRobotics: System Components

The EduRobotics Rapid Prototyping Kit consists of the mechanical hardware, electrical and electronics components, remote control system and P-Basic software needed to create and build small robotic devices. Documentation in the form of handbooks is available for the mechanical, electrical and software components of the kit. The materials are recyclable for repeated use with

minimum needs for replacement parts each semester. Figure one illustrates a simple device that can be constructed from the kit.

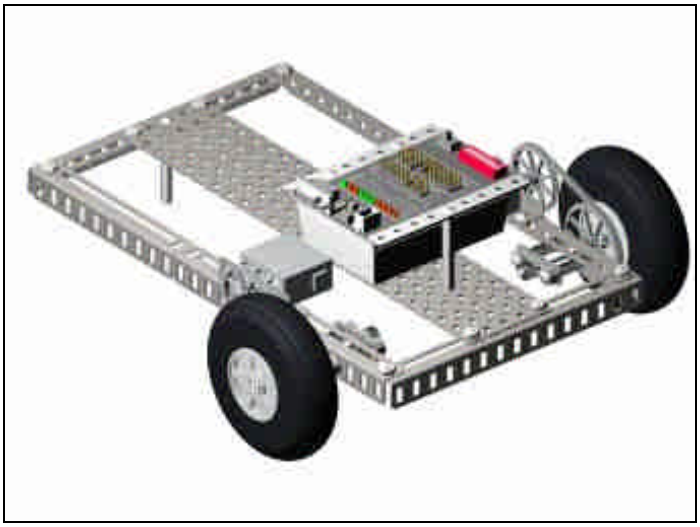

Figure One – Drive system created with the kit.

The mechanical components, displayed in figure two, consist of structural members such as brackets, shafts, bearings, pivots, gussets, standoffs, collars and fasteners. In addition to the structural members, sprockets, plastic chain, shafts, and an assortment of wheels are included in the kit.

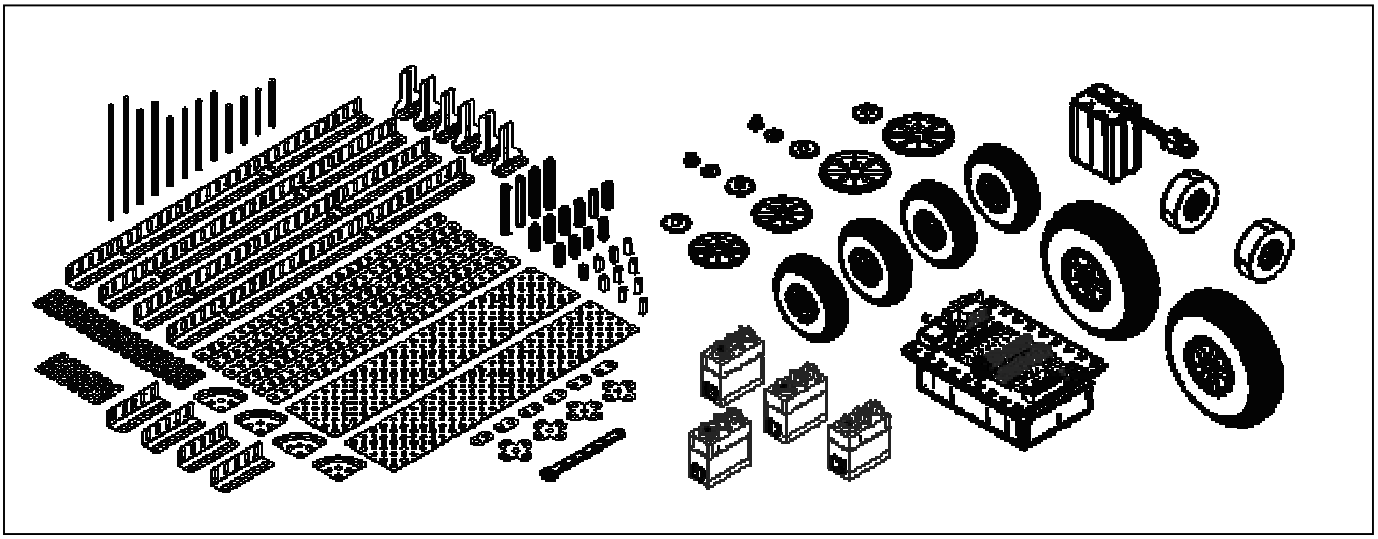

Figure Two – Mechanical components of the kit.

The mechanical components are durable and designed to be compatible with one another. The metal structural members are intended to be raw material from which lengths can be cut to create specific shapes. Each metal piece is fabricated with existing connection points spaced such to enable perfect alignment with motors and other pieces in the kit as illustrated in figure 2.

Like the mechanical components, the electrical components are designed to be fully compatible with the structural members. As such the electrical components have mounts that enable these components to be fastened to structural members. Square stock (a mechanical component) is used as motor shafts, with the shafts fully compatible with sprockets and wheels.

The electrical components of the kit include modified servomotors that can be either proportionally controlled or relay controlled. Unlike traditional servomotors that have a limited range of motion, EduRobotics servos are capable of full and repeated rotation like any other DC motor. Limit switches are also provided in the kit. The system uses a 7.2 Volt rechargeable battery and a charger is provided in the kit. The charger may be used to provide system power while bench testing designs.

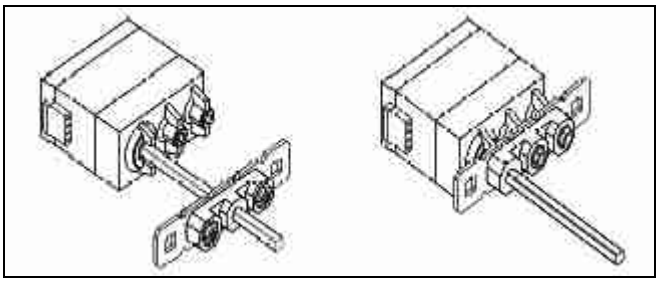

Figure Three – Compatibility of system components.

The Operator Interface and Robot Controller, illustrated in figure four, are the communication and control platforms for the kit. These units enable the completed designs to be remotely controlled using computer joysticks as well as push buttons and user designed analog signals. In addition, the robot controller can be programmed to operate in autonomous mode using sensor inputs on the robot controller.

The operator interface takes input from the robot operators and relays those signals to the robot controller using a 900 MHz radio signal thereby enabling wireless remote control. Simultaneous operation of multiple systems is established by setting dipswitches on each unit that allow unique communication between each operating unit and its interface. The Operator Interface allow for 16 digital inputs (from switches) and 16 analog inputs (such as potentiometers or other sensors). Information is transferred back and forth between the Operator Interface and the Robot Controller with the Operator Interface displaying the condition of PWM outputs, relays and battery voltage of the Robot Controller. The robot controller, illustrated in figure four, contains an internal radio and a controllable microprocessor.

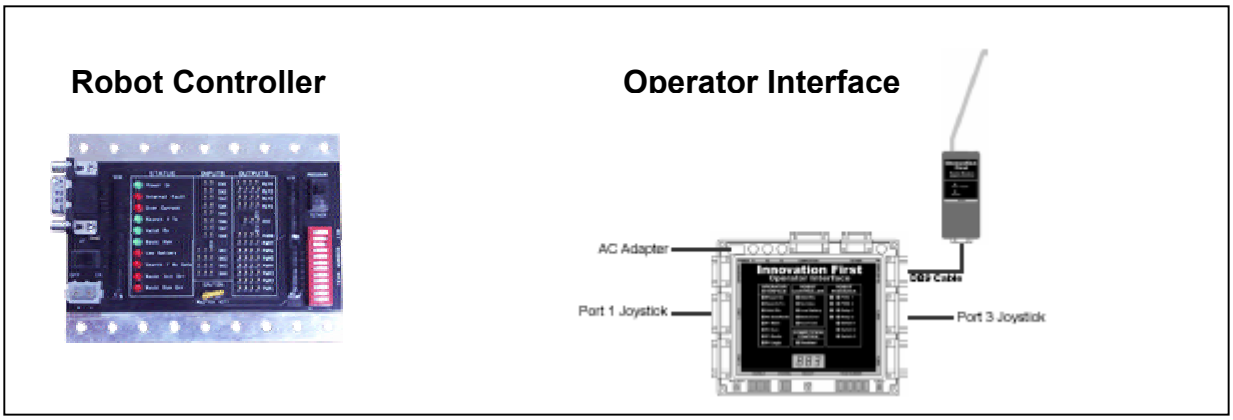

Figure Four – EduRobotics Robot Controller and Operator Interface.

The Robot Controller is designed to be compatible electrically and mechanically with the other components in the kit, as illustrated in figure one where the controller is an integral part of the design. The Robot Controller receives information from the Operator Interfaces, collects information from on-board sensors, and then processes those signals to determine robot functions. The Robot Controller uses Parallax microprocessors and is programmable using a Parallax form of BASIC known as P-BASIC. Default code is provided allowing the system to be immediately used without programming (figure five).

```
'---------- Buttons to Relays-------------------------------------------------------------
'-----------------------------------------------------------------------------------------
'   This maps the joystick buttons to specific relay outputs.  Relays 1 and 2
'   use limit switches to stop the movement in one direction.
'   The &  used below is the PBASIC symbol for AND
'   The &~ used below is the PBASIC symbol for AND NOT

relay1_fwd = p1_sw_trig &~ rc_sw1      'Port 1 Trigger = Relay 1 Forward, unless rc_sw1 is ON
relay1_rev = p1_sw_top  &~ rc_sw2      'Port 1 Thumb   = Relay 1 Reverse, unless rc_sw2 is ON
relay2_fwd = p2_sw_trig &~ rc_sw3      'Port 2 Trigger = Relay 2 Forward, unless rc_sw3 is ON
relay2_rev = p2_sw_top  &~ rc_sw4      'Port 2 Thumb   = Relay 2 Reverse, unless rc_sw4 is ON

relay3_fwd = p3_sw_trig                'Port 3 Trigger = Relay 3 Forward
relay3_rev = p3_sw_top                 'Port 3 Thumb   = Relay 3 Reverse
relay4_fwd = p4_sw_trig                'Port 4 Trigger = Relay 4 Forward
relay4_rev = p4_sw_top                 'Port 4 Thumb   = Relay 4 Reverse

relay5_fwd = p1_sw_aux1                'Port 1 Aux1    = Relay 5 Forward
relay5_rev = p1_sw_aux2                'Port 1 Aux2    = Relay 5 Forward
relay6_fwd = p3_sw_aux1                'Port 3 Aux1    = Relay 6 Forward
relay6_rev = p3_sw_aux2                'Port 3 Aux2    = Relay 6 Forward
relay7_fwd = p4_sw_aux1                'Port 4 Aux1    = Relay 7 Forward
relay7_rev = p4_sw_aux2                'Port 4 Aux2    = Relay 7 Reverse

relay8_fwd = 1                         'Relay 8        = Forward (turns the rotating light ON)
relay8_rev = 0                         'Relay 8        = Forward
```

Figure Five – Default code example for limit switch operations.

The Robot Controller has 8 PWM outputs for proportional control and 4 relay outputs for on-off control. There are 8 digital inputs and 4 analog inputs on the Robot Controller. Limit switches can be used (digital input) to prevent motor operation when interference is detected and the default program contains the coding to enable this function. Sensors such as rotational potentiometers can be used to measure wheel rotations, with the coding developed to enact specific functions when ranges are reached.

Supporting documentation is available on the Innovation First, Inc. web site for the mechanical, electrical and programming components of the kit. In addition the national robotics competition known as FIRST uses the EduRobotics kits as a training tool. FIRST has developed training tutorials for the EduRobotics kits and those documents are available on the web at *www.usfirst.org* by searching for "EduRobotics" on that site. The current cost of a complete kit is approximately $1,400. Since the material can be re-used, that initial investment is being spread over the cost of many semesters at the U.S. Coast Guard Academy. At the U.S. Coast Guard Academy, the department purchased the kits. Consumables are restocked each semester with an average cost of $200 per semester.

Design Application

At the U.S. Coast Guard Academy these kits have been used to support a competition based design activity. A scenario originally developed by Mr. Glenn Kaufman of Raytheon Systems for an engineering outreach program was modified as the mission task for this exercise. For the exercise, teams of five students were provided with a robotics prototyping kit and were required to design a robotic device that accomplished as many game challenges as possible during four-minute competition rounds.

The game scenario, played out on an 8'x8' playing surface, was based on restoration operations of a shipping channel following a hurricane. In this scenario the task for each team was to design a vehicle (i.e. a Coast Guard Buoy Tender) that could rescue passengers from a sinking ship, remove debris from a channel, place a containment boom around the a sinking ship leaking oil, and service channel buoys. The more missions that were accomplished in four minutes, the more points awarded to the team.

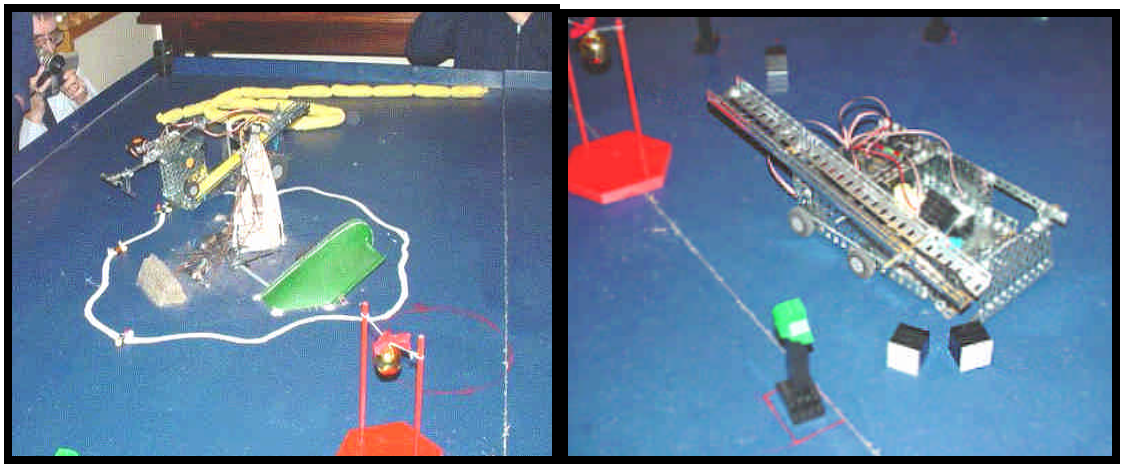

Figure Six – Playing field and robot example.

While the class lecture presents the design topics, the design sequence is applied in the lab, illustrated in figure seve. Each team must use the design process to guide their design. Three lab periods are devoted to the design activity where the students learn about the kit, and then design, construct and test their solutions. A class period is devoted to the competition itself when teams demonstrate the success of their work.

Figure Seven – Kit of components and assembly.

In addition to the competition, the teams must deliver a presentation on their work as well as a report explaining how they applied the design process to their solution. The reports include discussions on using a decision matrix project planning software as design tools. As to be expected, the students favor this component of the class and it is hoped they are able to benefit from the experience when they apply design fundamentals in future courses.

Summary and Recommendations

The EduRobotics Rapid Prototyping Kit is an effective tool to introduce sophomore level Mechanical Engineering majors to engineering design. The kits enable sophisticated electro-mechanical systems to be quickly developed and remotely controlled using wireless communications. This experience allows students to not only gain exposure to design but also provides an introduction to sensors, data acquisition, control processing and computer programming.

As a test platform for this system, the U.S. Coast Guard Academy Mechanical Engineering Section has been in continual contact with the designers of this system. That collaboration has resulted in improvements to the first version of the system with respect to hardware components and battery sizes/charging. Current suggestions for the kit include adding a pneumatic component to the kit to more readily use linear actuators.

In the future we hope to incorporate a CAD aspect to this project using Solid Works. In this case students would first design their robot by assembling the solid models of the components and then construct the actual devices using kit components. It is felt that such an approach would reinforce the design methodology and enable students to further refine their design methodology.

References:

1. West, H, Flowers, W., Gilmore, D., "Hands-On Design in Engineering Education: Learning by Doing What?, 1990, *Engineering Education*, Vol. 80, Number 5, 560-564.

2. Dixon, G. W., Wilczynski, V., and Ford, E. J., "Air Engine as a Manufacturing Project in an Introductory Design Course," with Dixon, G.W. and Ford, E.J., 2002, American Society for Engineering Education Annual Conference Proceedings.

3. Hyman, B., Fundamentals of Engineering Design, 1998. Prentice-Hall, Inc. Upper Saddle River, NJ.

4. Dufee, William, "A Hands-On Introduction of Engineering Course for Large Numbers of Students," 2001, Proceedings of the 2001 American Society for Engineering Education Annual Conference & Exposition.

5. Miner, S. M. and Tyler, T. N., "A Projects Based Introduction to Mechanical Engineering," 2001, Proceedings of the 2001 American Society for Engineering Education Annual Conference & Exposition.

6. Ahlgren, D. J. and Verner, I. M., "Integration of a Fire-Fighting Robot Contest in Multi-Level Engineering Education," 2001, Proceedings of the 2001 American Society for Engineering Education Annual Conference & Exposition.

7. Wilczynski, V., Dixon, G.W. and Kmiecik, C.G., "A Robotics Competition to Interest Minorities in Engineering," 1998, American Society for Engineering Education Annual Conference Proceedings.

8. Wilczynski, V. and Jennings, J. J., "Creating Virtual Teams for Engineering Design," *International Journal of Engineering Education*, in press.

Biographical Information

VINCENT WILCZYNSKI
CDR Vincent Wilczynski, Ph.D., is an Associate Professor of Mechanical Engineering at the U.S. Coast Guard Academy. He has been the chair of the ASEE Design in Engineering Education Division and is a national officer of ASME. CDR Wilczynski was awarded the 2001 Outstanding Baccalaureate Colleges Professor of the Year by the Carnegie Foundation for the Advancement of Teaching and the Council for Advancement and Support of Education.

GREGG W. DIXON
Gregg Dixon is a Professor of Mechanical Engineering and Head of the Mechanical Engineering Program at the U.S. Coast Guard Academy. He received an M.S. degree in Engineering Science in 1966 from Stanford University in a combined B.S./M.S program. He received a Ph.D. in M.E. from Stanford in 1970. He previously taught at California State University, Northridge and served as a consultant to the International Atomic Energy Agency.

ERIC J. FORD
Eric Ford is an Assistant Professor of Mechanical Engineering at the U.S. Coast Guard Academy. He received a B.S. degree in Naval Architecture and Marine Engineering from the U.S. Coast Guard Academy in 1991 and M.S. degrees in Naval Architecture and Marine Engineering and Mechanical Engineering from the Massachusetts Institute of Technology in 1995.