AC 2009-737: TESTING OF CARBON-MONOXIDE AND CARBON-DIOXIDE SENSORS WITH SIMPLE APPARATUS IN AN ENGINEERING EDUCATION LABORATORY

Dale Litwhiler, Pennsylvania State University, Berks

Dale H. Litwhiler is an Associate Professor at Penn State, Berks Campus in Reading, PA. He received his B.S. from Penn State University (1984), his M.S. from Syracuse University (1989) and his Ph.D. from Lehigh University (2000) all in electrical engineering. Prior to beginning his academic career in 2002, he worked with IBM Federal Sys-tems and Lockheed Martin Commercial Space Systems as a hardware and software design engineer.

Barbara Lombardi, Universidad Simón Bolívar

Barbara Lombardi is a materials engineer with specialization in ceramics at Universidad Simon Bolivar in Caracas, Venezuela. She completed her degree with a research project with honors at Penn State Berks, PA, USA. She served as aerodynamics assistant for the Formula-SAE team at Simon Bolivar University during the 2005-2006 period.

© American Society for Engineering Education, 2009

Testing of Carbon Monoxide and Carbon Dioxide Sensors with Simple Apparatus in an Engineering Education Laboratory

Abstract

As part of a summer internship in materials engineering, the characteristics of carbon monoxide (CO) and carbon dioxide (CO_2) sensors were investigated. These gases were chosen for this work because of the materials used in the sensors and their importance in environmental testing and monitoring applications, both indoor and outdoor. The work was performed in an electrical engineering laboratory facility which lacked sophisticated chambers for testing gas sensors. Homemade chambers were constructed from readily available components. Commercially available probes for the measurement of CO and CO_2 were purchased and used as the reference devices for the testing and calibration of the sensors under test. Gases for testing each sensor were obtained from common sources. Conditioning electronics for each sensor were constructed per the manufacturer's datasheets and applications notes. Data acquisition software was written using LabVIEW™ to create virtual instruments for each sensor. This paper presents the motivation for investigating CO and CO_2 sensor performance and applications. The sensor test chamber design considerations and the actual chamber design are also presented and discussed. The problems and safety concerns associated with using CO and CO_2 are provided together with the safe handling methods employed during this investigation. Methods for obtaining the required test gases are presented. The sensor signal conditioning hardware is also provided. Experimental results and future applications of this work are presented and discussed. This paper presents materials and methods that can be implemented in an engineering education laboratory environment with minimal investment yet still produce satisfactory results.

Introduction

Measurement and control of carbon monoxide (CO) and carbon dioxide (CO2) gas levels in the environment is very important for human health and the health of our planet. A summer internship for an international student created the opportunity to develop some creative and simple apparatus for testing CO and CO_2 sensors in an electrical engineering laboratory setting.

Neither the engineering laboratory nor any other laboratory on campus was equipped with the appropriate chambers for testing such devices. A source for the test gases was also a problem. Such small quantities of each gas were needed and the budget constraints were such that it was not feasible to purchase the gases from a commercial supplier. The gas handling equipment such as fittings, regulators, etc., is very costly regardless of the amount of gas purchased. Therefore, a homemade chamber was fabricated from household components and test gases were obtained from very common sources.

In order to test the sensors, reference instruments were required to provide a calibrated method of measuring the level of test gas in the chamber. Commercial probes for the measurement of CO and CO_2 were found to be fairly inexpensive and thus were purchased for this project. The chamber was designed and constructed to accommodate these probes.

Using the manufacturer's datasheets and application notes, conditioning electronics for each sensor were designed and constructed. A Labjack™ model U12 data acquisition unit was used to perform some of the sensor measurements. Data acquisition software was written using LabVIEW™ to create virtual instruments for each sensor.[1]

The data obtained from testing the gas sensors corresponds well with the published manufacturer's data. The ideas presented here are suitable for use in an engineering education laboratory environment to obtain very acceptable results at a minimal cost.

Sensors Tested

Three gas sensors were tested during this investigation. All three sensors are manufactured by Figaro Engineering, Inc. The TGS 4161 is a carbon dioxide gas sensor. The TGS 2442 is a carbon monoxide gas sensor. The TGS 5042 is also a carbon monoxide gas sensor.

TGS 4161

The TGS 4161 is a solid electrolyte CO_2 sensor. The TGS 4161 has a range of carbon dioxide detection of 350~10,000ppm. The CO_2 sensitive element consists of a solid electrolyte formed between two electrodes, together with a printed heater (RuO_2) substrate. By monitoring the change in electromotive force (EMF) generated between the two electrodes, it is possible to measure CO_2 gas concentration.[2] Figure 1 shows a photograph and cutaway diagram of the TGS 4161 sensor.

The TGS 4161 was powered from the LabJack data acquisition unit that also measured its output voltage after being amplified by a gain of three to help improve resolution.[2] Figure 2 shows the sensor and amplifier circuit. The TGS 4161 exhibits a very large output impedance therefore an operational amplifier with extremely small input bias current is required to make accurate measurements.

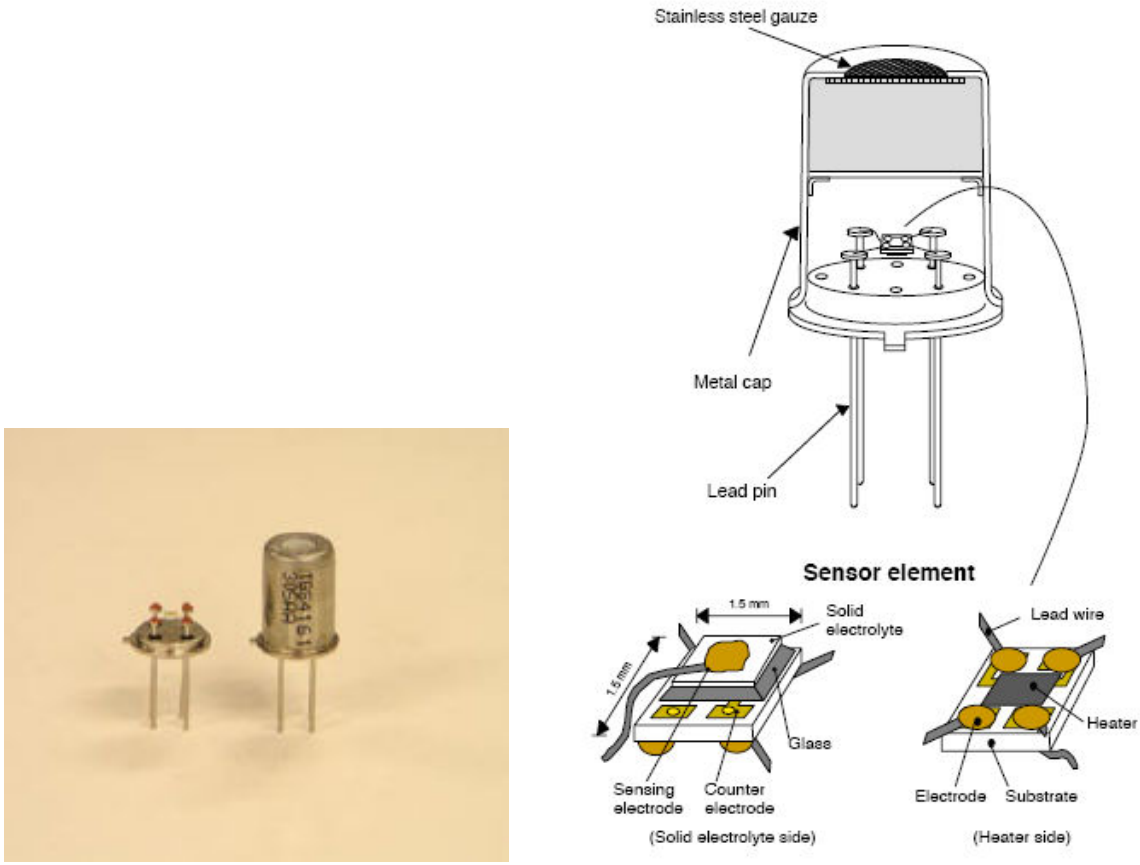

Figure 1. Figaro TGS 4161 carbon dioxide sensor

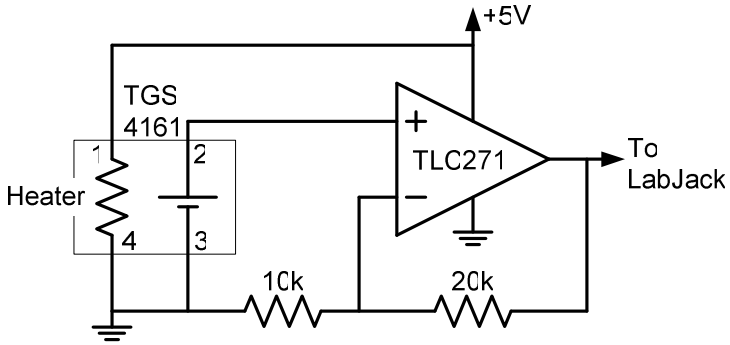

Figure 2. TGS 4161 power and amplifier circuit

TGS 2442

The TGS 2442 is a multilayer carbon monoxide (CO) sensor with a useable detection range of 30 – 1000ppm of CO. A glass layer for thermal insulation is printed between a ruthenium oxide

(RuO_2) heater and an alumina substrate. A pair of gold electrodes for the heater is formed on a thermal insulator. The gas sensing layer, which is formed of tin dioxide (SnO_2), is printed on an electrical insulation layer which covers the heater. A pair of gold electrodes for measuring sensor resistance is formed on the electrical insulator.

In the presence of CO, the sensor's conductivity increases depending on the gas concentration in the air. A simple pulsed electrical circuit operating on a one second circuit voltage cycle can convert the change in conductivity to an output signal which corresponds to gas concentration.[3] Figure 3 shows a photograph and cutaway diagram of the TGS 2442 sensor.

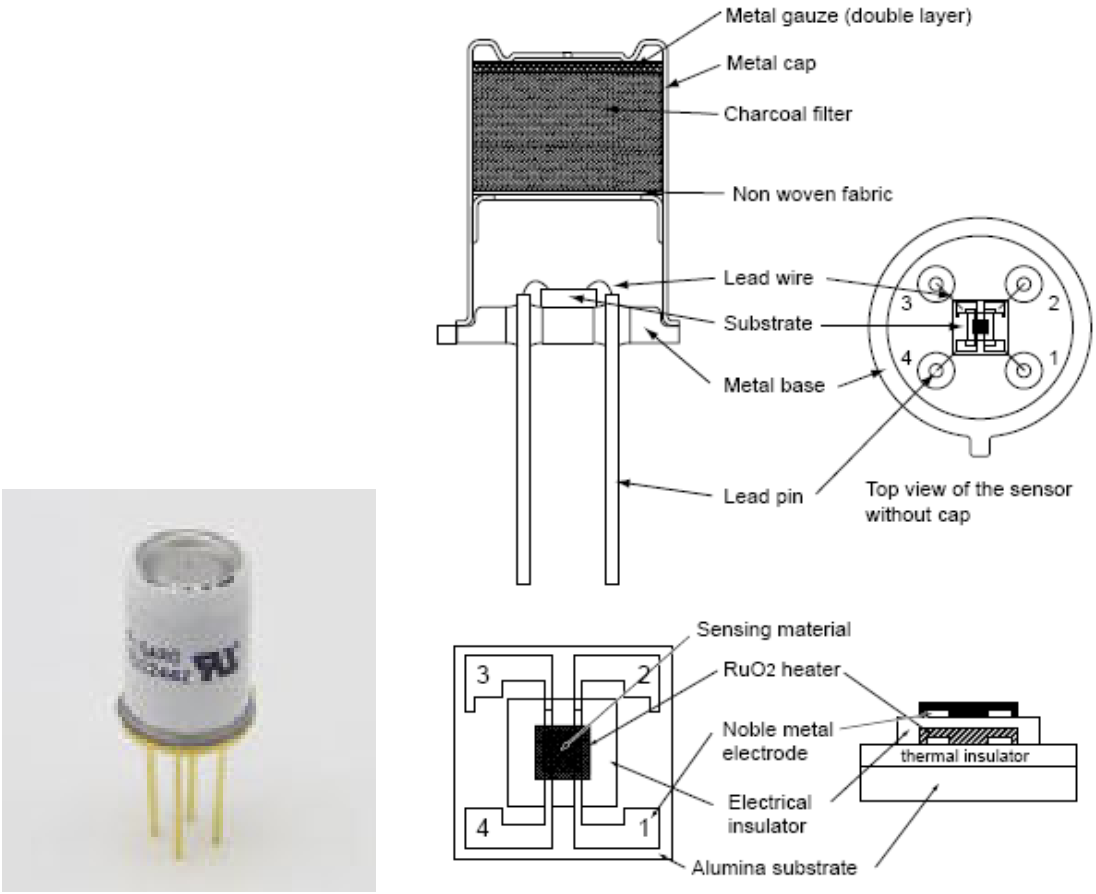

Figure 3. Figaro TGS 2442 carbon monoxide sensor

The TGS 2442 sensor requires a specific heat and measurement timing profile for proper operation. Figure 4 shows the timing profile and the circuit used to execute it. Because of the precise timing required, a microcontroller with a built-in analog-to-digital converter was used to control the heating and make the sensor voltage measurement. The measurement was then converted to a serial data stream and sent to a laptop computer where LabVIEW software was used to interpret and display the measurement.

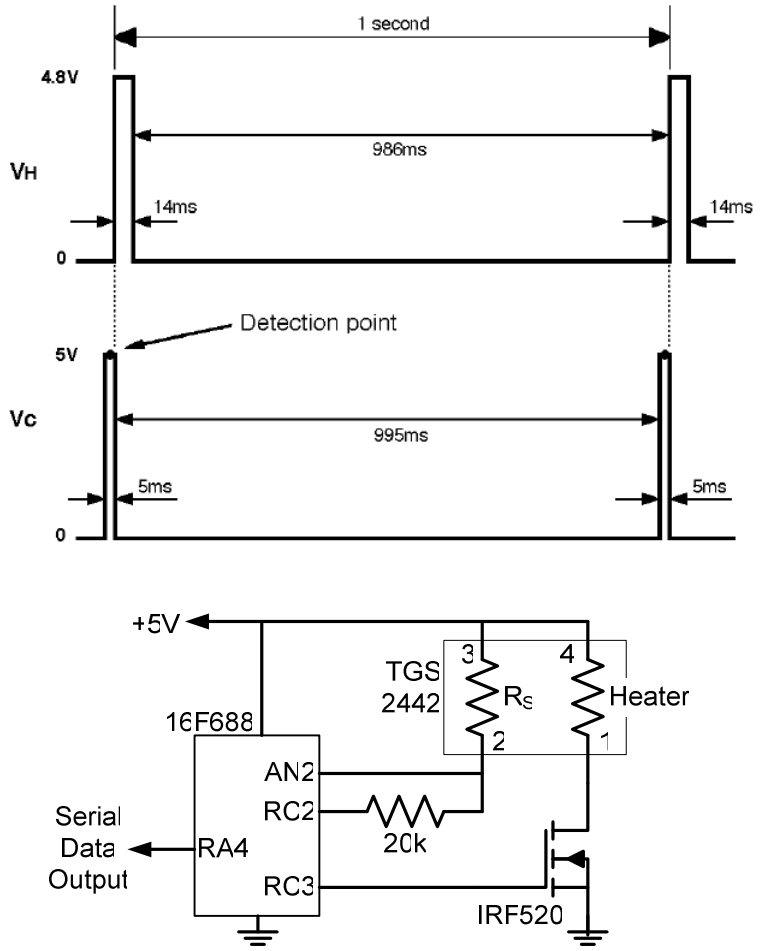

Figure 4. TGS 2442 heat / measure timing profile and circuit used.

TGS 5042

The TGS 5042s a battery operable electrochemical carbon monoxide sensor manufactured by Figaro. Its electrolyte is environmentally friendly, it poses no risk of electrolyte leakage, can detect concentrations as high as 1% CO, operates in a range from -40˚ and +70˚C, and it has lower sensitivity to interfering gases. The TGS 5042 has good long term stability, and high accuracy, it is typically used in portable CO detector applications. The sensor generates a minute electric current which can be converted into a measureable voltage by an op-amp current-to-voltage converter circuit.[4] For the investigation performed here, the output current of the TGS 5042 was measured directly with a Keithley model 195A DVM. Figure 5 shows a photograph and cutaway diagram of the TGS 5042 carbon monoxide sensor.

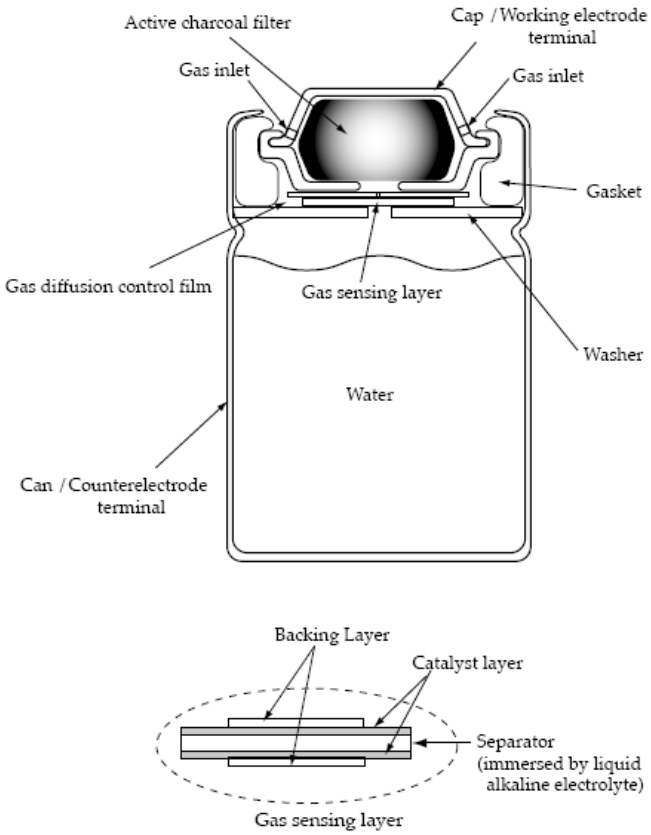

Figure 5. Figaro TGS 5042 Carbon Monoxide Sensor

Reference Gas Sources

To test each sensor, a controlled sample of test gas is required in order to produce the various required levels of concentration in the test chamber air. The laboratory in which the sensors were tested did not have access to a commercial source of carbon dioxide or carbon monoxide gas. The budget constraints of the project did not allow for purchase of even the smallest quantity of commercial gas. Therefore, more common, readily available, and affordable sources of carbon dioxide and carbon monoxide were used.

An excellent source of carbon dioxide is the exhaled breath of a human. The exhaled breath of an average human adult contains a concentration of about 4% (40,000 ppm) carbon dioxide.[5] The CO_2 sensor that was tested (TGS 4161) has a measurement range of 350ppm – 10,000ppm. Therefore it was possible to simply use small puffs of human breath to control the level of CO_2 in the test chamber to within the range needed to test the sensor.

The exhaust gas of a gasoline-fueled internal combustion engine is, unfortunately, a source of high concentrations of carbon monoxide gas. Even modern automobile engines with catalytic converters can still produce 1% (10,000ppm) concentration of CO.[6]

In order to produce a portable source of carbon monoxide gas, the tailpipe exhaust from an automobile was collected in a cardboard box containing a small compressor. With the automobile engine running at idle, the compressor was used to fill a small tube-type cart tire with compressed air from within the closed cardboard box environment. The tire was then used during the sensor testing to provide small bursts of CO-rich air into the sensor test chamber. Figure 6 shows a photograph of the apparatus used to collect the automobile exhaust.

Figure 6. Apparatus for collecting automobile exhaust gas

Reference Instrumentation

To serve as the reference for the measurement of gas concentrations in the test chamber, commercially available instruments were required. To measure the carbon dioxide concentration, the PASCO Model CI-6561 probe was used. For the carbon monoxide gas measurement reference, the Fluke CO-210 was used.

The PASCO CI-6561 carbon dioxide probe assembly is shown in Figure 7. The probe is designed to allow penetration into a sealed container through a rubber stopper to maintain a gas tight seal. The probe has two ranges of operation although on the lower range of 0 to 10,000ppm concentration of carbon dioxide was used for this investigation. The probe is powered from an external +5VDC and +/-12VDC via the 8-pin DIN connector through which the 0 – 10V output

signal also passes. The output voltage is proportional to CO_2 concentration. . (1mV / 1ppm CO_2).[7,8]

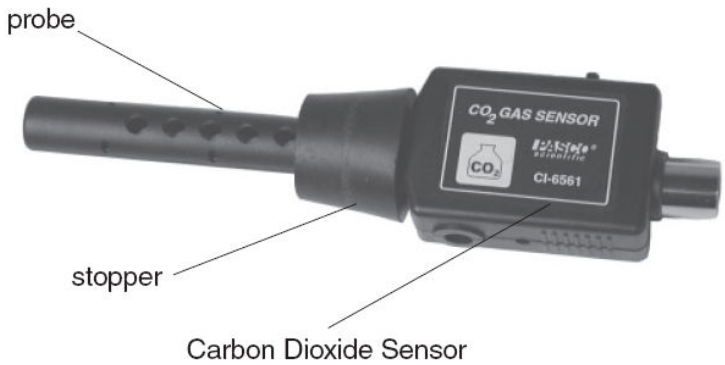

Figure 7. PASCO Model CI-6561 CO_2 gas probe

The Fluke CO-210 carbon monoxide probe is housed in a rugged, industrial package. The probe is battery powered and produces an output voltage that is proportional to CO concentration from 0 to 1000ppm (1mV / 1ppm) with a resolution of 1ppm and accuracy of 5%.[9] Figure 8 shows a photograph of the CO-210 probe.

Figure 8. Fluke Model CO-210 carbon monoxide gas probe

Chamber Construction and Use

The test chamber was constructed using a plastic 12 oz ground coffee container. This type of container was selected for its availability, ease of machining, ease of gluing, and inherent tight

sealing, yet easily removable lid. The sensors under test were mounted to the underside of the lid. The connecting wires were passed through a small hole in the lid. Glue (Plumber's GOOP™) was used to create an airtight seal around the wires. A separate lid was used for each sensor. Figure 8 shows the Fluke CO-210 probe mounted to one of the lids. Figure 9 also shows the TGS 2442 and TGS 5042 CO sensors and circuits mounted to the underside of the lid. Figure 10 shows the TGS 4161 CO_2 senor and circuit mounted to the underside of another lid.

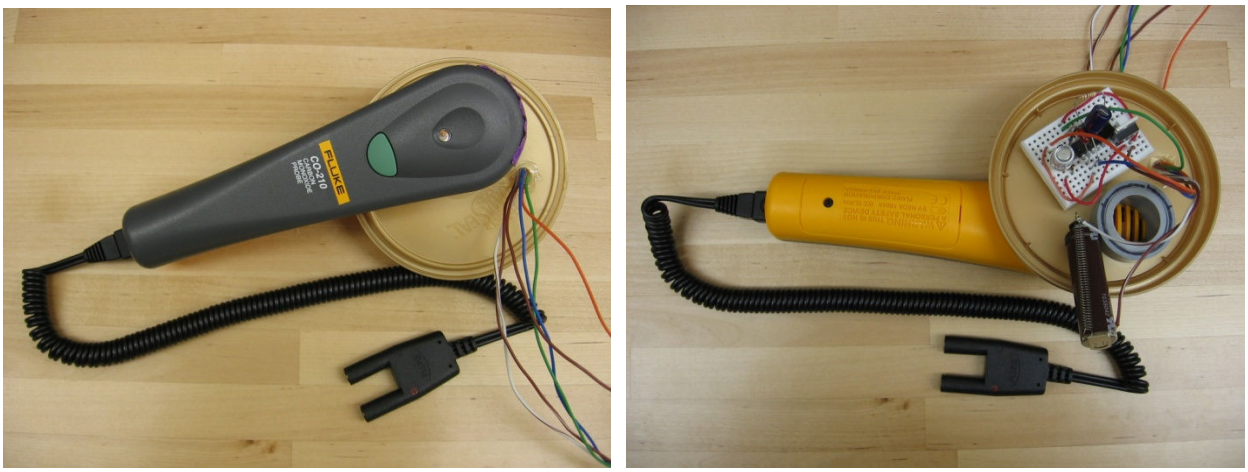

Figure 9. Fluke probe and CO sensors mounted to coffee container lid.

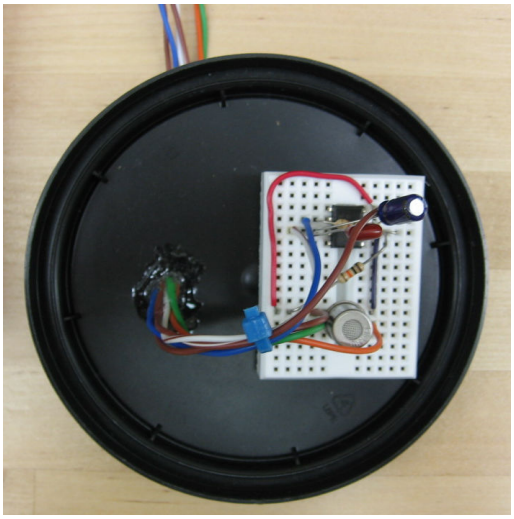

Figure 10. Carbon Dioxide sensor / circuit mounted to coffee container lid

The container was modified to add three additional capped openings (ports). A large port was added to the bottom of the container to allow the CI-6561 probe to penetrate the chamber. This port was created by drilling a large hole (~ 1.5" dia.) and gluing (GOOP again) a wide-mouth

plastic bottleneck cut from a vitamin bottle. When not in use, this port was easily sealed with a screw-on lid. Two small ports were added to opposite sides of the body of the container. These small ports were created by drilling small holes (~ 0.5" dia.) and gluing small plastic bottlenecks removed from shampoo sample bottles. These ports allowed the test gas to enter the chamber via one port while allowing some of the chamber gas to exit via the other port to provide more even gas mixing and avoid pressurizing the chamber. Figure 11 shows the coffee container chamber ports and with the Fluke CO-210 and the PASCO CI-6561 probe installed in their respective positions.

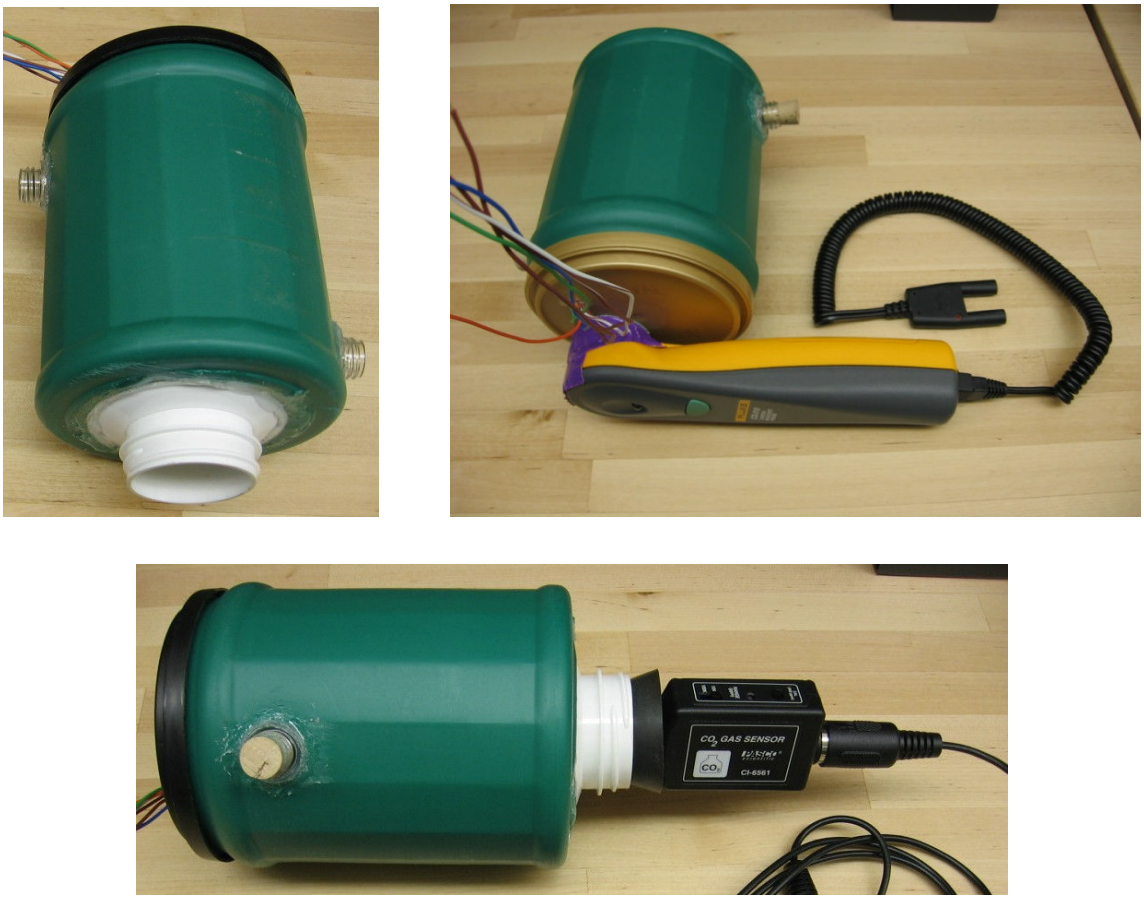

Figure 11. Coffee can chamber alone and with gas probes installed.

Sensor Test Results

The carbon dioxide sensor was tested by opening the two side ports of the chamber and slowly exhaling into one of the ports. Both ports were then closed and the readings of the Figaro TGS 4161 sensor and the PASCO CI-6561 probe were allowed to stabilize for a few minutes before recording. One of the small ports was then opened and the chamber air was allowed to slowly

exchange with the room air to reduce the CO_2 level. This process was repeated for the range of about 2500ppm to about 500ppm which could be repeated reliably. Note that the current level of naturally occurring CO_2 in the atmosphere is about 385ppm.[10] Figure 12 shows the data obtained for the TGS 4161 tested and the manufacturer's datasheet plot of typical resistance change with CO_2 concentration. After accounting for the way in which the manufacturer's data is presented, the slope of the two sample runs are very similar to that expected.

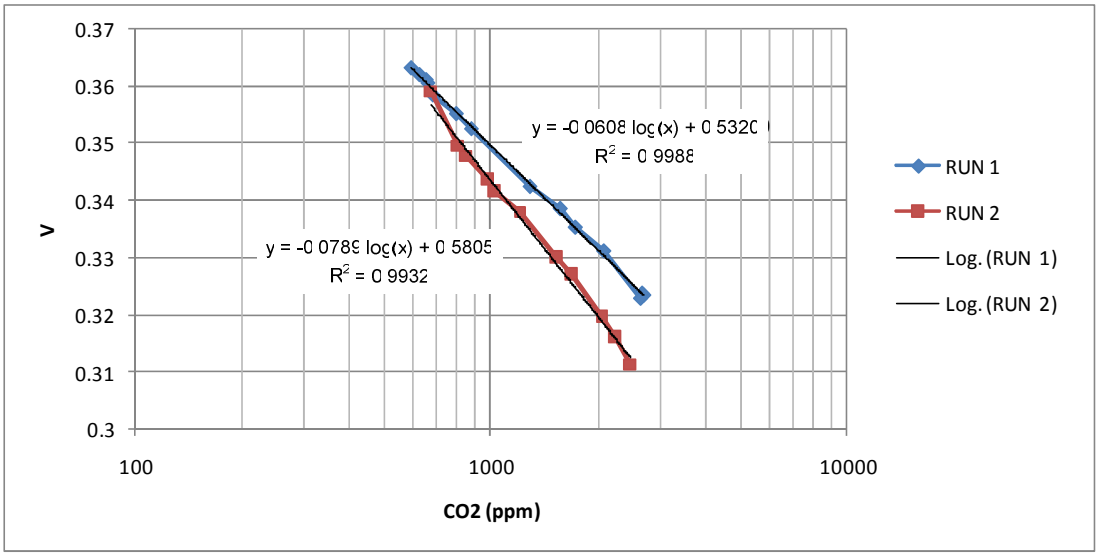

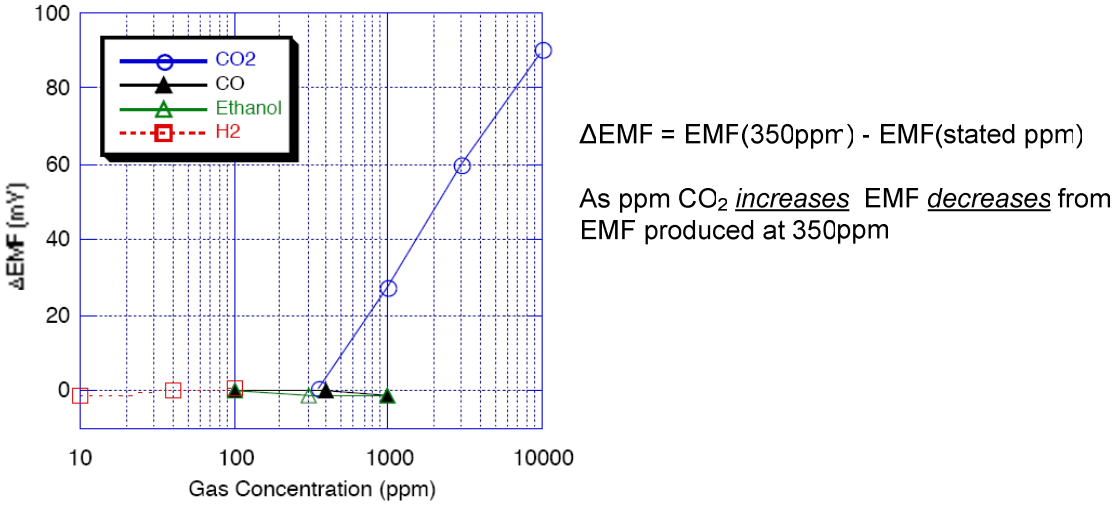

Figure 12. Measured data (top) and datasheet information for TGS 4161 CO_2 sensor.

The carbon monoxide sensors were tested with automobile exhaust gas. Although the amount of gas was very small, the testing was performed outdoors to avoid any possibility of CO gas inhalation. A short length of rubber hose fitted with a standard tire valve mating "chuck" was used to transfer a small amount of gas from the tire to the coffee can chamber. The

concentration levels were allowed to stabilize for a few minutes. More gas was added or released from the chamber as needed to attain the desired concentration levels for testing. Figure 13 shows the test setup.

The Fluke DVM (handheld) was used to measure the Fluke CO-210 probe output voltage. The Keithley DVM (bench unit) was used to measure the output current of the TGS 5042 sensor. The laptop computer receives the serial data from the TGS 2442 microcontroller circuit as shown earlier. The LabJack shown in Figure 13 was only used as a portable 5V power source for the TGS 2442 sensor. The tire containing the compressed CO gas is just off to the left of this photograph.

Figure 13. Test setup for carbon monoxide sensor test (tire not shown).

Figure 14 shows the data obtained for the TGS 2442 tested and the manufacturer's datasheet plot of typical resistance change with CO concentration. Notice that the two test runs indicate a device resistance decrease of about one decade per decade increase in concentration of carbon monoxide. This corresponds very well with the typical data from the manufacturer as shown.

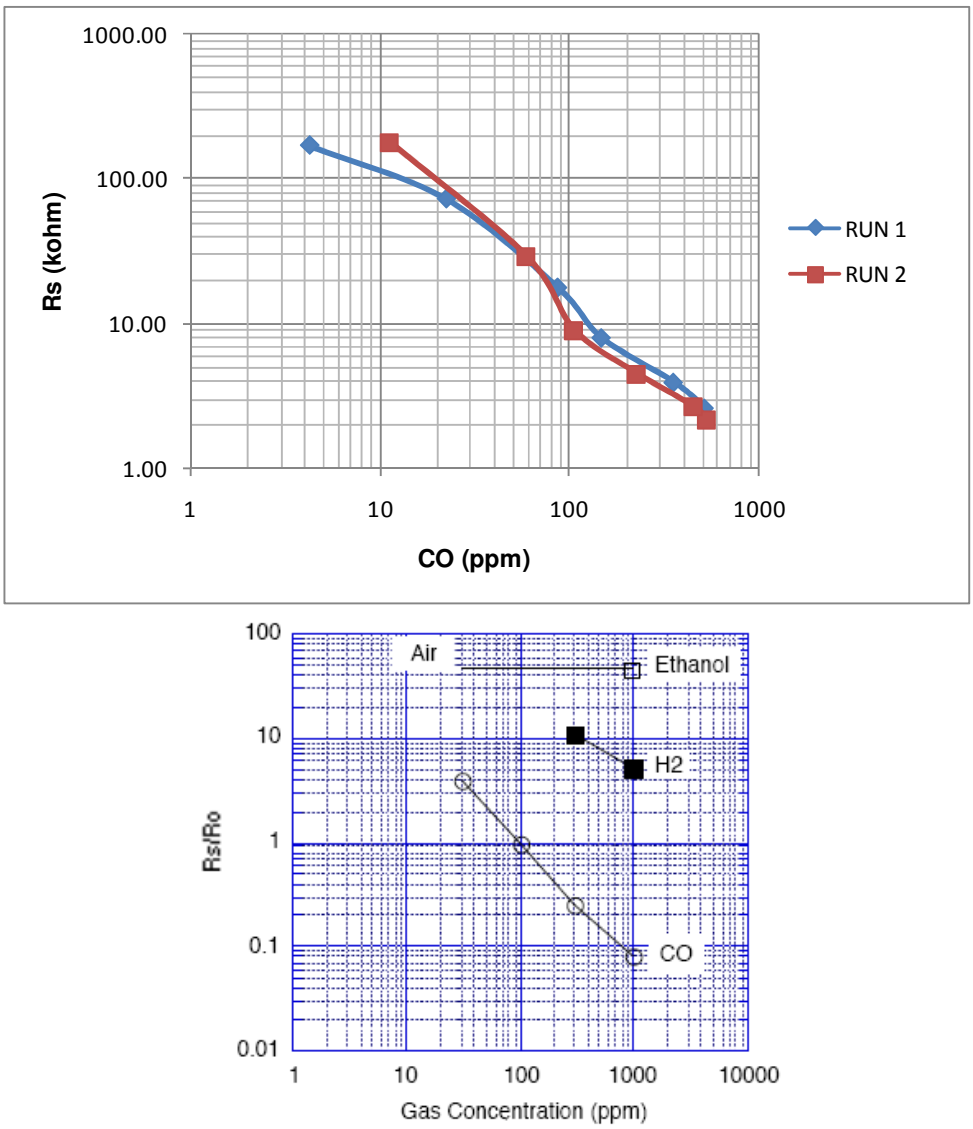

Figure 14. Measured data (top) and datasheet information for TGS 2442 CO sensor.

The data obtained from the TGS 5042 sensor is shown in Figure 15 along with the manufacturer's datasheet plot of device sensitivity to carbon monoxide gas. The two test runs exhibit a sensitivity of about 2nA/ppm which is very consistent with the manufacturer's published data.

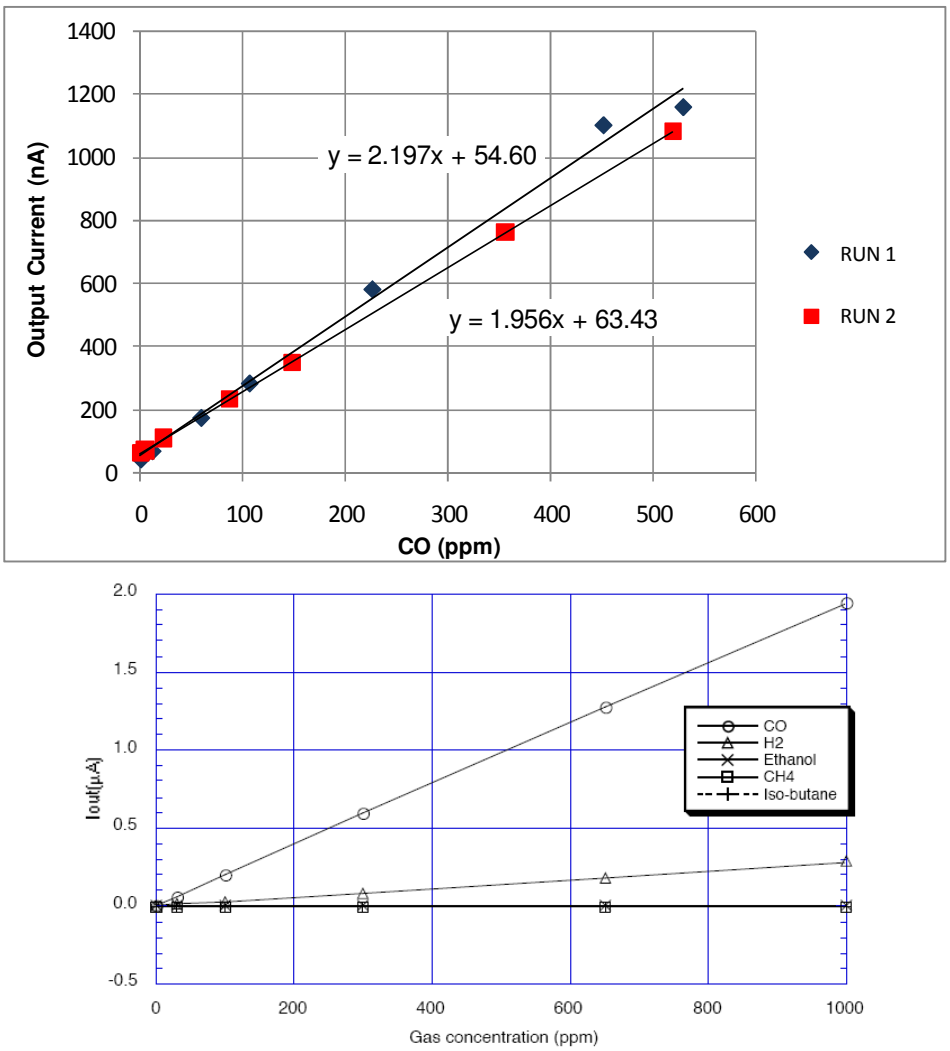

Figure 15. Measured data (top) and datasheet information for TGS 5042 CO sensor.

Conclusions

Simple, inexpensive apparatus were designed and fabricated for testing carbon monoxide and carbon dioxide sensors in an engineering education laboratory. Readily available sources for the required test gases were also tested as part of this investigation. Relatively inexpensive test probes were used as the reference measurement instruments. The results of the testing show very good correlation with manufacturer specifications for each sensor. These results show that simple apparatus and common gas sources can be used with good results to demonstrate applications of CO and CO_2 sensors in an engineering educational setting.

The ideas presented here can, of course, be extended to other platforms for data acquisition, processing, display, storage, and control. A Programmable Logic Controller (PLC) system could

be used for an industrial application. Also, the gas sensors could be incorporated into a Distributed System Control (DSC) network for a plant-wide monitoring and control system.

Monitoring and measuring atmospheric levels of CO and CO_2 is vital to accessing the health of the planet. Monitoring the levels of these gases in residential and public buildings is also important for safety and comfort of the occupants. The availability of low-cost CO and CO_2 sensors makes it possible to deploy warning systems in all buildings just as smoke detectors have been in the past.

The authors would like to reiterate the importance of proper ventilation when working with carbon monoxide gas. All operations with CO should be performed outdoors if no appropriate and approved laboratory ventilation hood is available.

Bibliography

1. Litwhiler, D. H., and, Lovell, T. D., "USB Data Acquisition Units Provide New Measurement and Control Options for Engineering Technology Students," Proceedings of the American Society for Engineering Education Annual Conference and Exposition, 2005
2. datasheet website: http://www.figaro.co.jp/en/pdf/CO2GasSensorTGS4161.pdf
3. datasheet website: http://www.figaro.co.jp/en/pdf/2442B00ProductInfo0707.pdf
4. datasheet website: http://www.figaro.co.jp/en/pdf/5042ProductInfo0607.pdf
5. website. http://www.biotopics.co.uk/humans/inhaledexhaled.html
6. website. http://en.wikipedia.org/wiki/Carbon_monoxide_poisoning
7. CI-6561datasheet website: ftp://ftp.pasco.com/Support/Documents/English/CI/CI-6561/012-08402a.pdf
8. PASCO datasheet website: ftp://ftp.pasco.com/Support/Documents/English/CI/CI-6611/012-10002B.pdf
9. CO-210 datasheet website: http://assets.fluke.com/manuals/co210___iseng0300.pdf
10. website: http://en.wikipedia.org/wiki/Carbon_dioxide