Use of Computers in Data Acquisition

M. Rabiee, B. Towers
Eastern Kentucky University

Abstract:

Computer Engineering, and Computer Engineering Technology graduates need a clear understanding of analog transducers and the way to connect them to computers via digital interface circuits. In industry, transducers are used to measure temperature, pressure, strain, flow, position, velocity, and other analog conditions. In most two-year, and four-year electronic programs, students generally study transducers with their applications in one analog course, instrumentation amplifiers in a second analog course, and microprocessor interfacing in a separate digital course. The integration of these three topics in which students design, simulate, build and test a data acquisition system will help them to understand a practical industrial application. In this paper we will use a PC Interface card to connect the interfacing circuit which is on a breadboard to the computer. The interfacing circuit will be connected to an analog circuit that measures temperature. All engineering and engineering technology school laboratories are equipped with microcomputers. The advantage of using a PC interface card is that with a moderate cost for interfacing cards, the computers can be used for the programming of the digital circuits which are connected to the analog data acquisition circuit. As an example we will discuss the design, simulation, construction, and programming of a circuit used to display the temperature, as well as indicate high and low temperature alarm conditions. Electronic Workbench for Windows 95 simulation software will be used to simulate the operation of the circuit prior to its actual construction. Next the electronic circuit will be constructed. Finally, the students will write a computer program to control the system, and display the temperature information. The students are grouped into several project teams. This approach is similar to experience they will encounter in industry. Therefore, this project will enforce the team work concept as well as integrating knowledge learned across several electronic classes.

Introduction:

This paper describes a project assigned to students during the last quarter of an Linear Op-Amp electronic class. Figure 1 shows the computer interface system block diagram. A 74LS245 Octal Transceiver chip was used to connect the analog Op-Amp, and the Fiber Optic circuits to the PC-Interface card that resides in an IBM compatible personal computer.

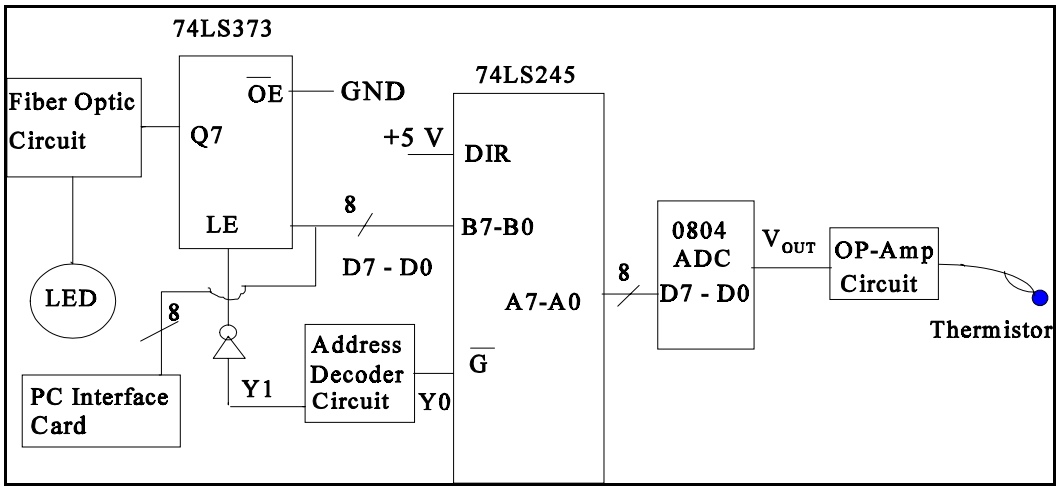

Figure 1 Schematic Block Diagram of the System

The system described in this paper measures temperature, in real time, and displays it on the computer screen. If the temperature is less than, or greater than programmable upper and lower limits, an alarm in the form of "Flashing" text and a "Computer Beep" sounds. Also, for these extreme temperature points, a signal was transmitted through an Optical Fiber Link to a red-color Light Emitting Diode (LED).

System Hardware:

The PC-Interface card can be purchased through the Electronic Industries Association (EIA) [1]. Figure 2 illustrates the pinout diagram of the PC-Interface card. This card can be placed in a 32-pin Industry Standard Association (ISA) port of an IBM compatible personal computer.

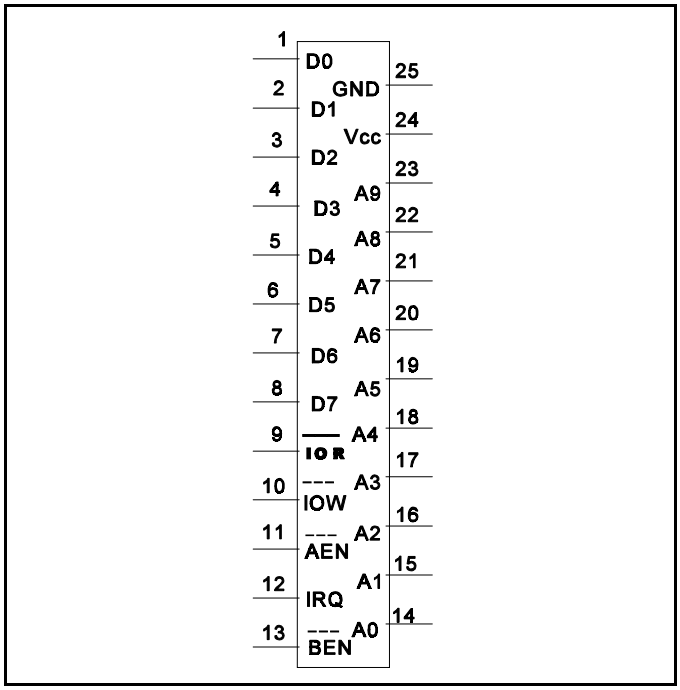

Figure 2 Pinout Diagram for the PC Interface Card

The Analog to Digital (0804 ADC) chip converts the analog voltage from the Op-Amp Transducer circuit to digital data. The 74LS245 Octal Transceiver (buffer) chip is used to connect the Analog to Digital Converter (ADC) to the PC Interface Card. Figures 3, 4, and 5 display the schematic diagram of the 0804 ADC, 74LS245, and 74LS373 chips [2].

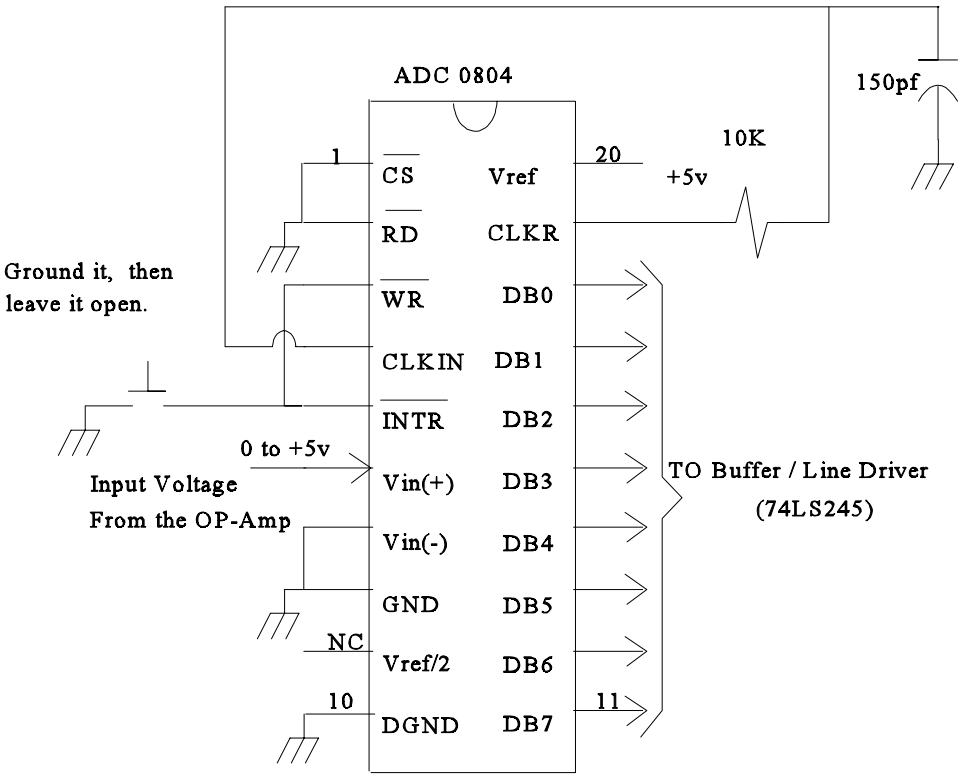

Figure 3 The 0804 Analog to Digital Converter (ADC)

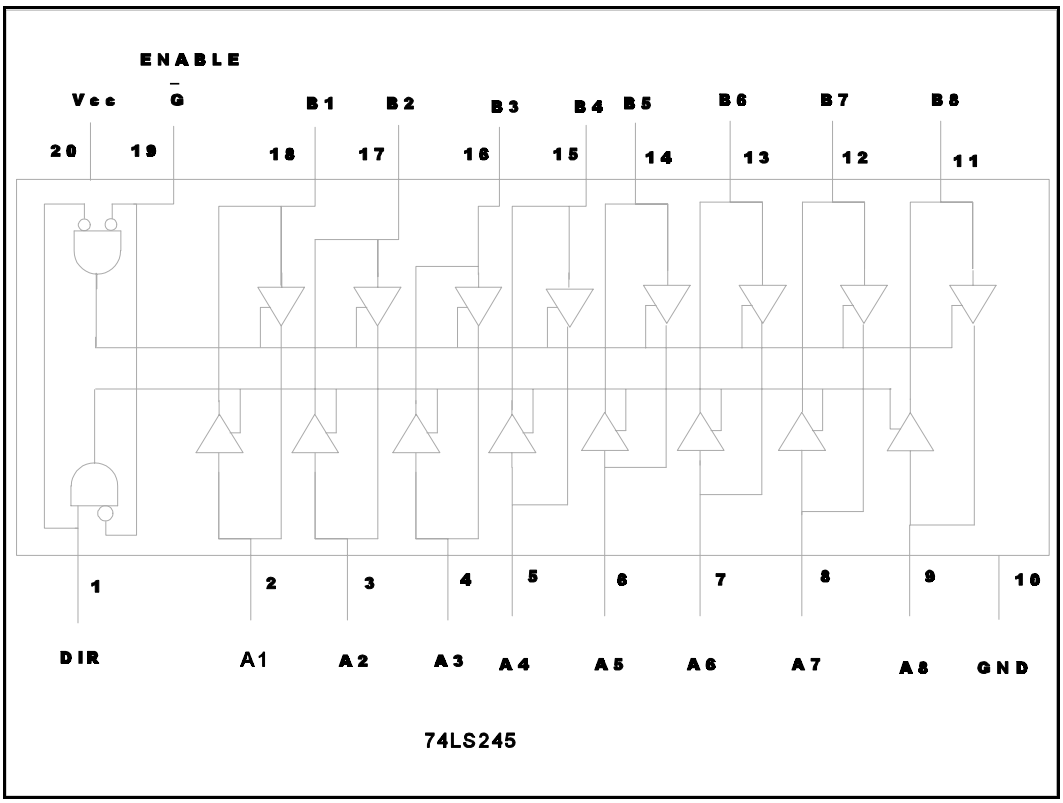

Figure 4 The 74LS245 Octal Buffer / Driver

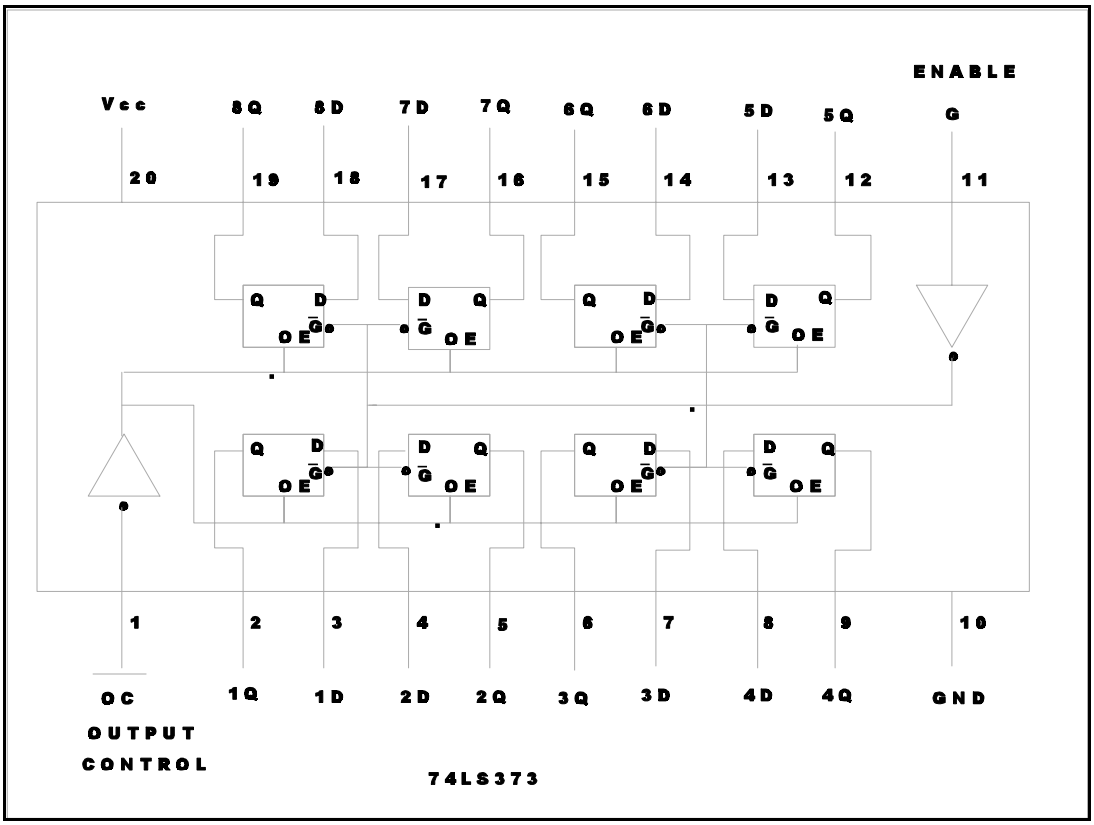

Figure 5 The 74LS373 Octal Latch

Figure 6 displays the Op-Amp bridge circuit which is used to convert temperature into a voltage which is then applied to the ADC Circuit as shown.

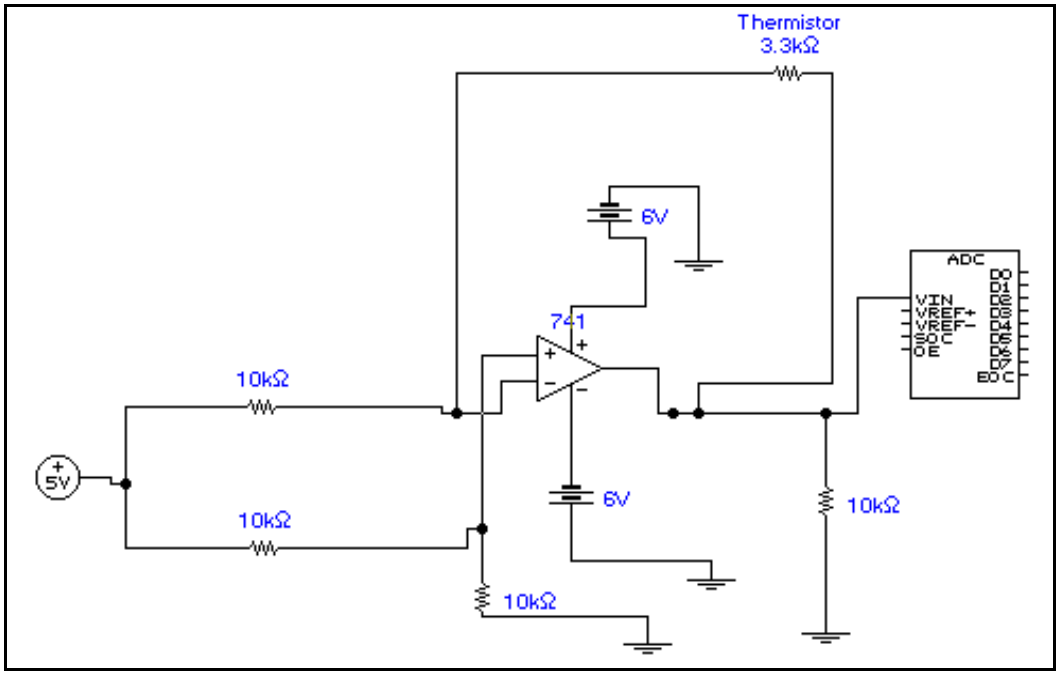

Figure 6 Analog Temperature Control Circuit

For this project a thermistor with a reference resistance of 3.3K ohms at 25 degrees Celsius was used. The thermistor input /output characteristic was measured over the temperature range of interest. Table 1 contains the measured data. A graph of the measured temperature in degrees Fahrenheit versus Op-Amp output voltage is shown on figure 7.

Op-Amp Output, V	ADC Output	Temepature, F	Temepature, C
2.614	133	35	1.67
3.331	169	50	10.00
3.913	199	71	21.67
4.539	231	110	43.33
4.662	238	125	51.67
4.782	244	150	65.56
4.862	248	175	79.44
4.916	251	209	98.33

Table 1 Op-Amp Output Voltage, ADC Output, and Temperature

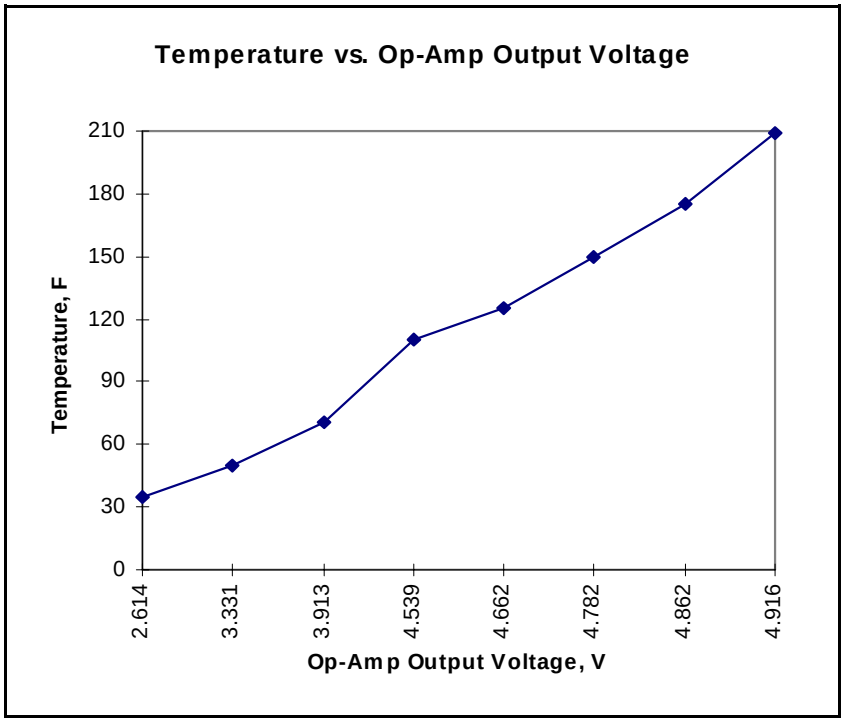

Figure 7 Temperature vs. Op-Amp Output Voltage

Figure 8 shows the Fiber Optic Link. We have used the Motorola model series MFOE71 Noninverting transmitter, and Motorola model series SN74LS132 receiver [3]. The optical transmitter and the optical receiver were separated by a one meter long fiber optic cable.

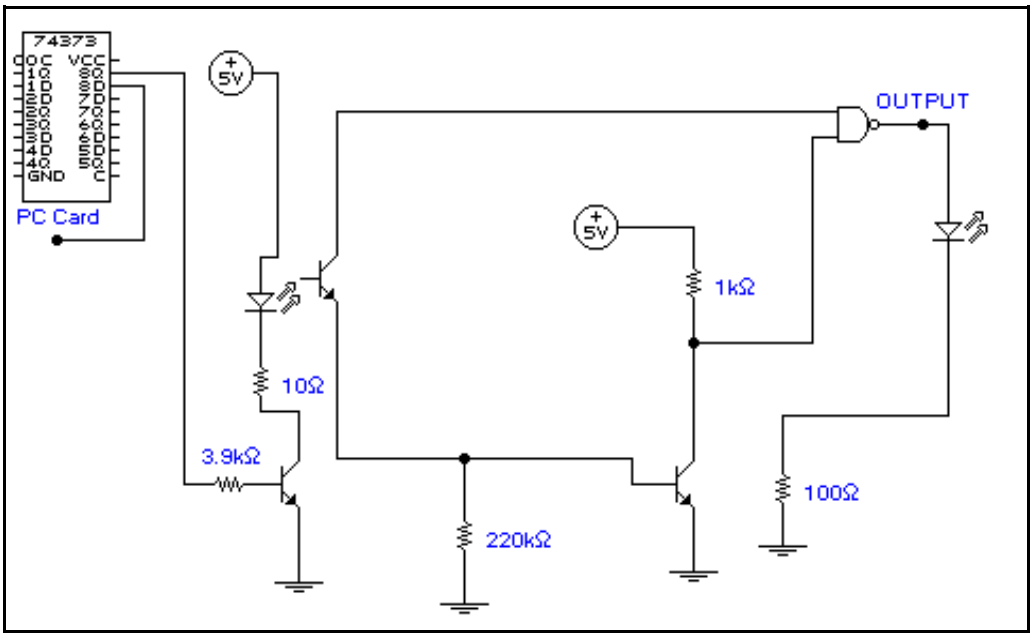

Figure 8 Fiber Optic Transmission Link

Address Decoder Circuit:

On most personal computers the address range 300-to-3FF hex is available for external use. Figure 9 shows the address map of a decoder circuit that will generate the chip-enable signals for this address range.

A15	A14	A13	A12	A11	A10	A9	A8	A7	A6	A5	A4	A3	A2	A1	A0	HEX Address Range
0	0	0	0	0	0	1	1	0	0	0	X	X	↕	↕	↕	0300h TO 03FFh

Figure 9 Address decoding map

The decoder circuit displayed in Figure 10 was built using Transistor-Transistor Logic (TTL) gates. The output of the decoder circuit was connected to the Bus Enable (BEN) pin of the PC interfacing card, and the Enable pin on the 74LS245 Octal Buffer chip.

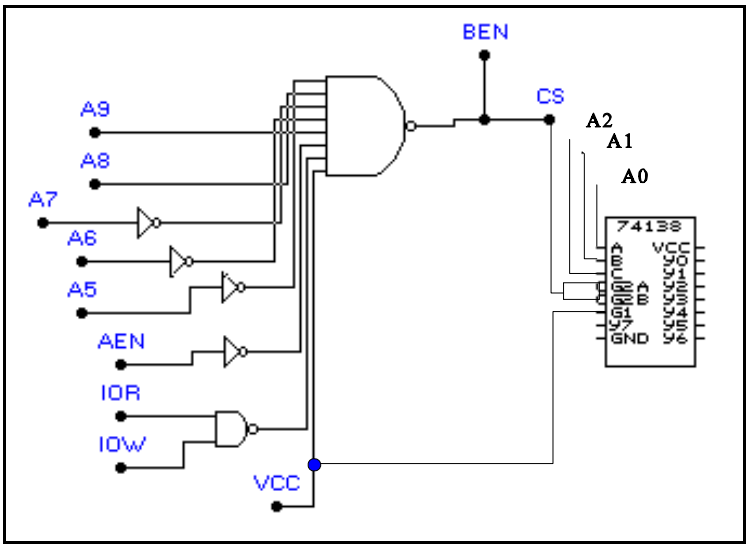

Figure 10 The Address Decoder Circuit

System Software:

The Flowchart of the Quick Basic computer program is displayed on Figure 11. The input data from Analog to Digital Converter (ADC) chip is read. Next, one of the equations for the Piecewise Linear lines of the thermistor curve was used to calculate the temperature. Then, two Conditional Program Statements are used to determine if an alarm condition has occurred. Finally, the temperature value is displayed on the computer screen. Appendix A contains the Basic Program for this project.

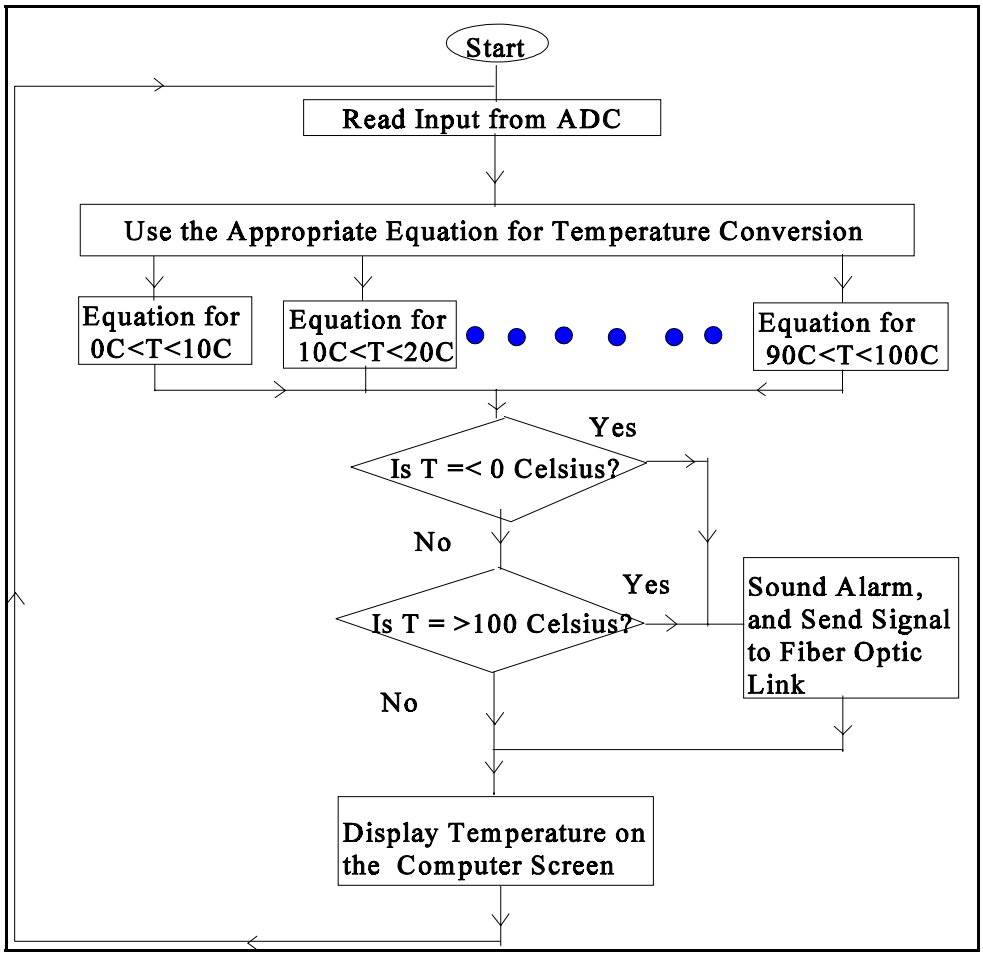

Figure 11 Program Flowchart

Conclusion:

This paper has described how a micro computer can provide a low cost method of interfacing real time, analog transducer data to a micro computer using analog-digital circuits. Using this approach, students were able, in a laboratory setting, to gain practical experience in designing, simulating, building, and programming a practical real world data acquisition system.

Appendix A:

```
5   CLS
10  PRINT "Press Esc to exit..."
20  PRINT "INPUT HIGH TEMP LIMIT"
25  INPUT H
30  PRINT "INPUT LOW TEMP LIMIT"
```

```
35   INPUT L
40   CLS
45   DO
REM-----------------------------[INPUT STEP FROM ADC]------------------------
50  d = INP(768)

REM-----------------------------[ASSIGN STEP VOLTAGE]------------------------
55  v2 = d * .0196078

REM-----------------------------[SEND STEP DATA TO TEMP FORMULA]-------------
60  IF d > 251 THEN COLOR 4, 0: GOTO 105:  ELSE COLOR 7, 0
65  IF d >= 248 THEN GOTO 130
70  IF d >= 244 THEN GOTO 150
75  IF d >= 238 THEN GOTO 170
80  IF d >= 231 THEN GOTO 190
85  IF d >= 199 THEN GOTO 210
90  IF d >= 168 THEN GOTO 230
95  IF d > 133 THEN GOTO 250
100  IF d <= 133 THEN COLOR 3, 0: GOTO 270:  ELSE COLOR 7, 0

REM-----------------------------[OVER RANGE]---------------------------------
105 PRINT " - TEMPERATURE IS OVER 212 DEGREES F - "
110 FOR i = 1 TO 10000
115 NEXT i
120 CLS
125 GOTO 355

REM-----------------------------[1ST TEMP RANGE]-----------------------------
130  T = 209
135  V = 4.922
140  S = .0016
145  GOTO 295

REM-----------------------------[2ND TEMP RANGE]-----------------------------
150  T = 175
155  V = 4.86
160  S = .0032
165 GOTO 295

REM-----------------------------[3RD TEMP RANGE]-----------------------------
170 T = 150
175 V = 4.784
180 S = .0048
185 GOTO 295
```

```
REM-----------------------------[4TH TEMP RANGE]-----------------------------
190 T = 125
195 V = 4.667
200 S = .0082
205 GOTO 295

REM-----------------------------[5TH TEMP RANGE]-----------------------------
210 T = 110
215 V = 4.539
220 S = .016
225 GOTO 295

REM-----------------------------[6TH TEMP RANGE]-----------------------------
230 T = 71
235 V = 3.913
240 S = .028
245 GOTO 295

REM-----------------------------[7TH TEMP RANGE]-----------------------------
250 T = 50
255 V = 3.331
260 S = .048
265 GOTO 295

REM-----------------------------[UNDER RANGE]--------------------------------
270 PRINT " - TEMPERATURE IS UNDER 35 DEGREES F - "
275 FOR i = 1 TO 10000
280 NEXT i
285 CLS
290 GOTO 355

REM-----------------------------[H/L ALARM]----------------------------------
295  t2 = (T - ((V - v2) / S))
300  CLS
305  PRINT "Hit Esc key to stop"
310  PRINT
315  PRINT "the voltage is "; : PRINT USING "###.##"; v2
320  PRINT "TEMPERATURE F =  "; : PRINT USING "###.#"; t2
325  T3 = 5 / 9 * (t2 - 32)
330  PRINT "TEMPERATURE C =  "; : PRINT USING "###.#"; T3
335  FOR i = 1 TO 10000
340  NEXT I
342 REM  If T <= 0 Degree Celsius, then Sound the Alarm, and  Signal to Fiber Optic Link.
345 IF t2 <= L THEN COLOR 0, 3: PRINT : PRINT " - LOW ALARM REACHED - ": PRINT :
BEEP:
```

```
    OUT 769, 128
348  REM  If T = > 100 Degree Celsius, then Sound the Alarm, and  Signal to Fiber Optic Link.
350 IF t2 >= H THEN COLOR 0, 4: PRINT : PRINT " - HIGH ALARM REACHED - ": PRINT
: BEEP:
    OUT 769, 128
355 FOR i = 1 TO 10000
360 NEXT i
365 LOOP UNTIL INKEY$ = CHR$(27)

REM----------[END]----------
```

References:

1. Electronic Industries Association, Consumer Electronic Group, Washington, D.C.

2. Intel Peripheral Components, Intel Literature Sales, Mt. Prospect IL, 1993.

3. Motorola Semiconductor, P.O.Box 20912, Phoenix, Arizona 85036.

Massoud Rabiee received his Ph.D. in Electrical Engineering, from University of Kentucky, in 1987. He is presently an associate professor at Eastern Kentucky University. Dr. Rabiee is a registered professional Engineer in the State of Kentucky, and a member of IEEE, ASEE, and NAIT.

Robert Towers received his Ed.D from University of Kentucky, in 1994, and B.S. in Electrical Engineering from University of Kentucky, in 1967. He is presently an associate professor at Eastern Kentucky University. Dr. Towers is a registered professional Engineer in the State of Kentucky.