Using Computer Graphics for Descriptive Geometry-style Problems in a Freshman Graphics Course

Dennis R. Stevenson, P. E.
University of Wisconsin-Parkside

Abstract

This is a report on a project to incorporate more challenging graphics in the form of traditional descriptive geometry problems, in a freshman graphics course. As a result of this project, students do a greater amount of three-dimensional spatial analysis problems on computer instead of on paper. This project reflects a number of objectives of the program faculty. This institution uses AutoCAD, although other systems could also be employed

Objectives

Graphics faculty wanted to challenge students with somewhat more difficult problems involving spatial analysis and visual analysis at the end of a mostly traditional graphics course. These objectives involved several aspects of the course. Generally, they are in agreement with the authors of a significant modern graphics text [1], that graphic analysis is more important that ever and that technical graphics tools are certainly more available and powerful than ever, and that more graphics analysis should be included in typical courses.

- Faculty wanted to provide students with more mastery of auxiliary views, especially sequential auxiliary views. Outside of dimensioning, this had been a leading point of dissatisfaction in our course for some time.
- Faculty wanted students to develop some ability in applying three-dimensional models to solve problems.
- There was not any more course time to devote to these topics, so it would be necessary to cover any additions effectively but efficiently, in a very short time. An advantage was that, these topics would be covered at the end of the semester, when students had some command over the AutoCAD system, including both 2-D construction and 3-D modeling.
- Faculty wanted to use computers to grade assignments to some extent.

Approach

Some descriptive geometry problems were chosen as targets for the project. [2] Several were developed and tested, including shortest distance between a point and plane, distance between skew lines, piercing points, and others. The most ambitious project is reviewed here, true angle between a line and plane. All objects are, of course, the most general form of oblique lines and planes. The same problem will be illustrated in both of the following methods.

Two new activities were introduced to satisfy these objectives. First, students solved several traditional descriptive geometry problems using three-dimensional CAD. Second, students used an auxiliary view simulator to create and interactively investigate how sequential auxiliary views functioned.

Manipulating Solid Models

Students used their recently acquired abilities in three-dimensional AutoCAD modeling to solve free-form problems. It turned out that it was notably easier for them to solve these descriptive geometry problems, faster and more accurately, and with much more comprehension, than the author did, doing these problems himself in school with paper and pencil. Figures 1 through 6 show a problem in finding the true angle between a line and triangular plane. Side-by side viewports are used, with the right one showing a constant pictorial view. The majority of the construction takes place in the left panel. The construction makes extensive use of AutoCAD's UCS (user coordinate system) manipulation features and viewing control features such as PLAN. [3]

1. The given top view and pictorial view. The triangular prism has an oblique face. The angle between this face and a line is to be found.
2. The UCS plane is aligned with the top face
3. The UCS is rotated -90 degrees about the Y axis
4. This provides the edge view of the plane.
5. A perpendicular to the plane is constructed
6. Another UCS is defined, containing the original line and the plane normal (points shown with small spheres), which ensures that the true angle can be viewed and dimensioned.

An auxiliary view simulator was also developed. This simulator shows up to three sequential auxiliary view when the user specifies the (1) location and (b) viewing angle of each auxiliary, the two essential parameters of auxiliary views. This simulator allows students to have some experience with sequential auxiliary views, without requiring the time or skills with instruments that traditional descriptive geometry requires. The auxiliary view simulator appears to help students obtain an increased understanding of physical relationships of objects. Figures 7 through 10 illustrate the same problem solved with auxiliary views.

7. A front and side view
8. Choose the location and angle of the first auxiliary, showing an edge view of the plane
9. Location and angle of the second auxiliary, with the true size of the plane
10. Location and angle of the third auxiliary, which has the true length of the line and edge view of the plane

Note that this simulator is an interactive tool, almost an animation, that shows auxiliaries and how they change as the viewing angle is changed. It is not capable of precision measurement but is able to readily show the relationship between viewing angle and the resulting auxiliary view. It is also possible to retrieve and grade the results of assignments.

Bibliography

1. Bertoline, Gary, et al, Technical Graphics Communication, McGraw-Hill, 1997
2. Pare, E. G., et al, Descriptive Geometry, Macmillan, 1987
3. Leach, James, AutoCAD 14 Instructor, McGraw-Hill, 1998

Dennis Stevenson is Associate Professor of Computer Science and Engineering and has taught engineering graphics at the University of Wisconsin-Parkside for several years. He taught a CAD course before AutoCAD was released, and was one of the first to include CAD as a regular component of freshman engineering graphics courses. Prior to joining the UW-P faculty, he was Design Manager of a Chicago-area engineering design firm. Prof. Stevenson is the author of *Fundamentals of Design Graphics*.

Figure 1

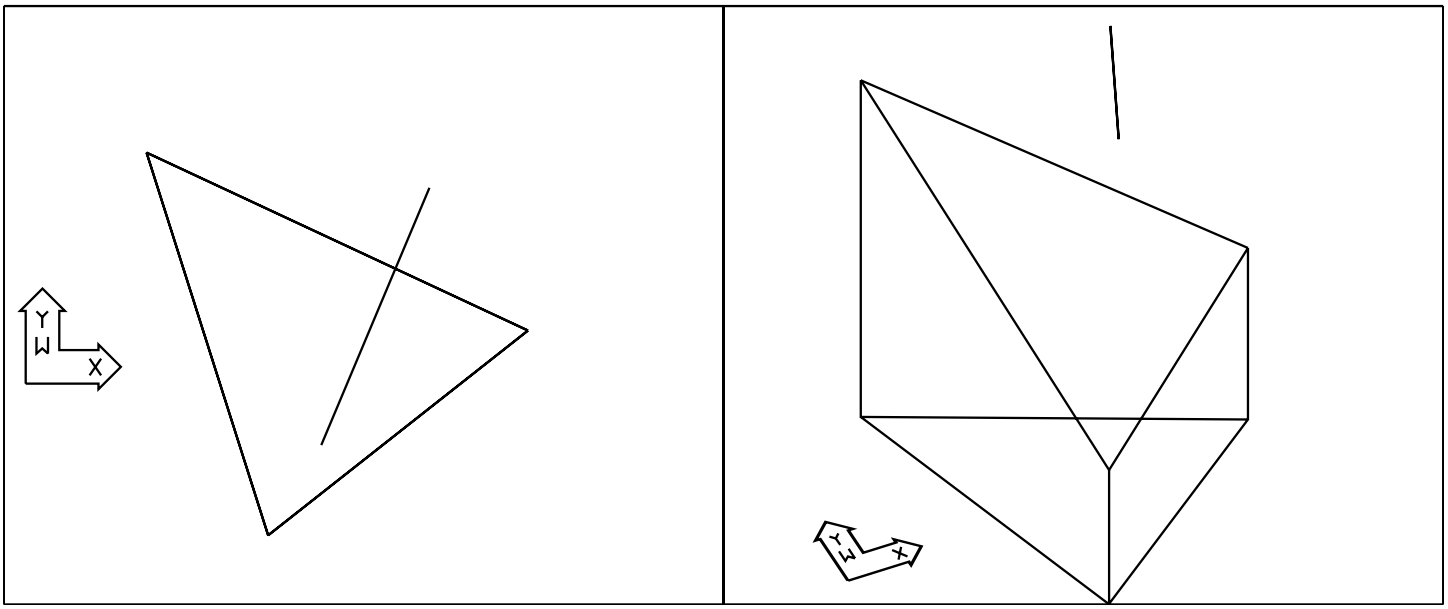

Figure 2

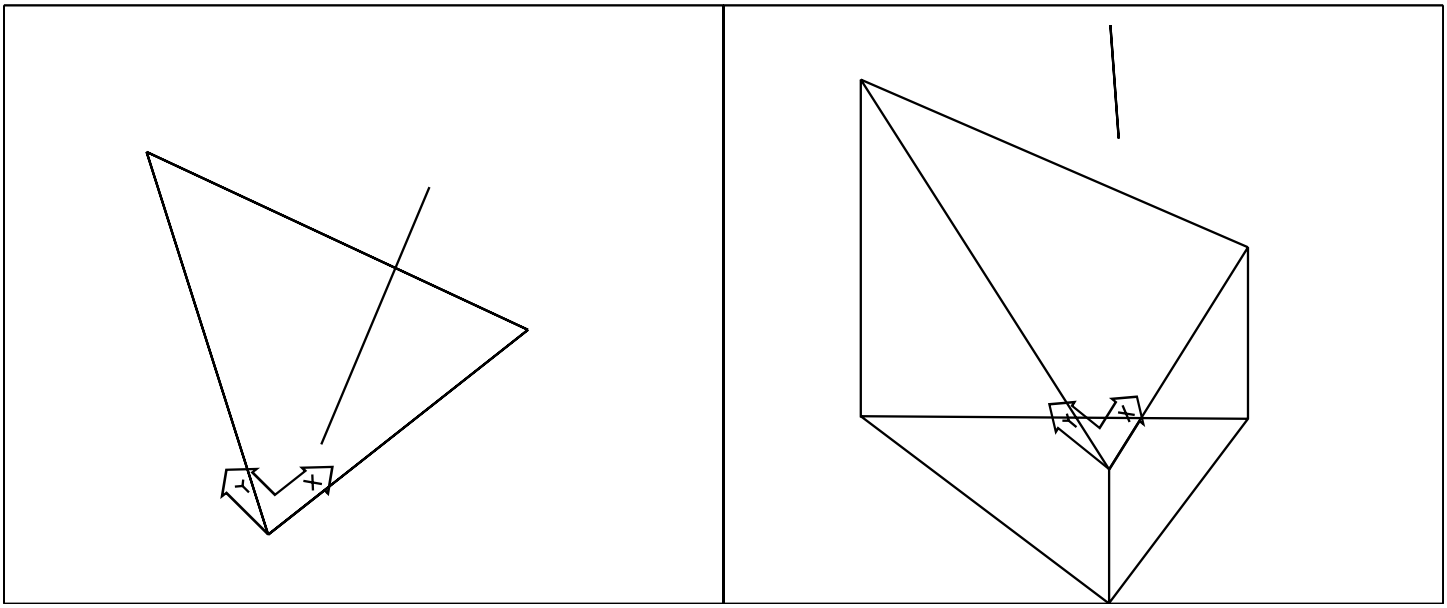

Figure 3

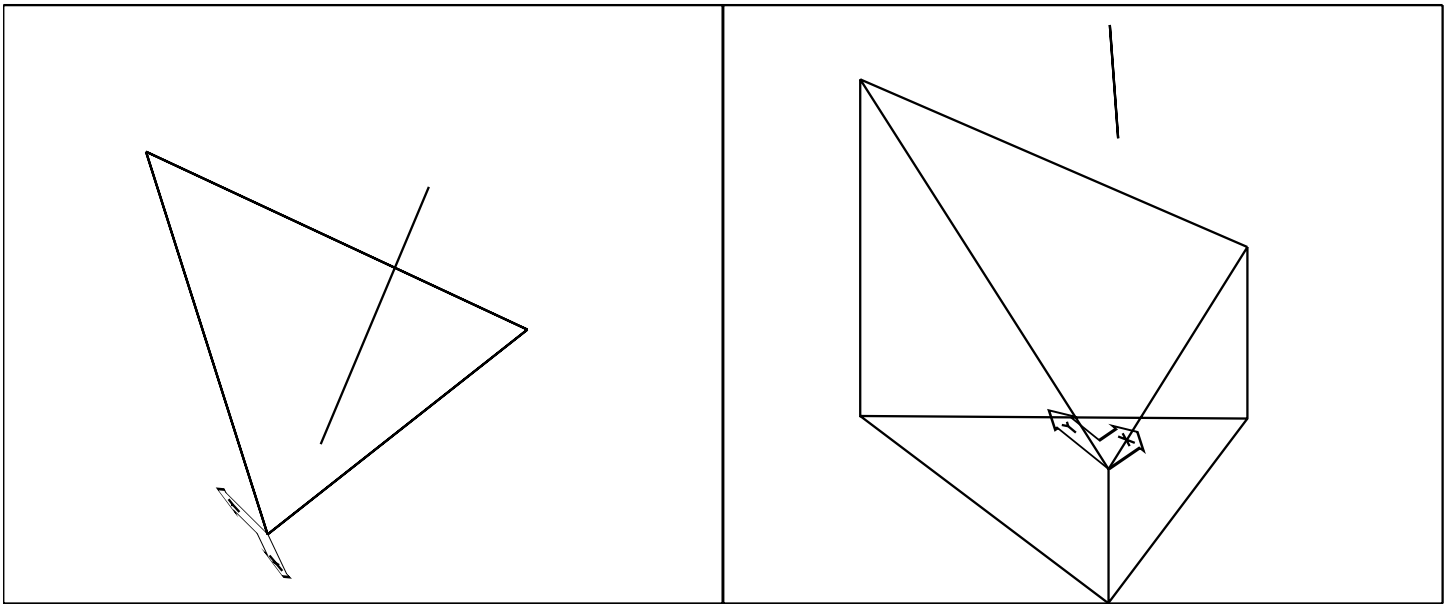

Figure 4

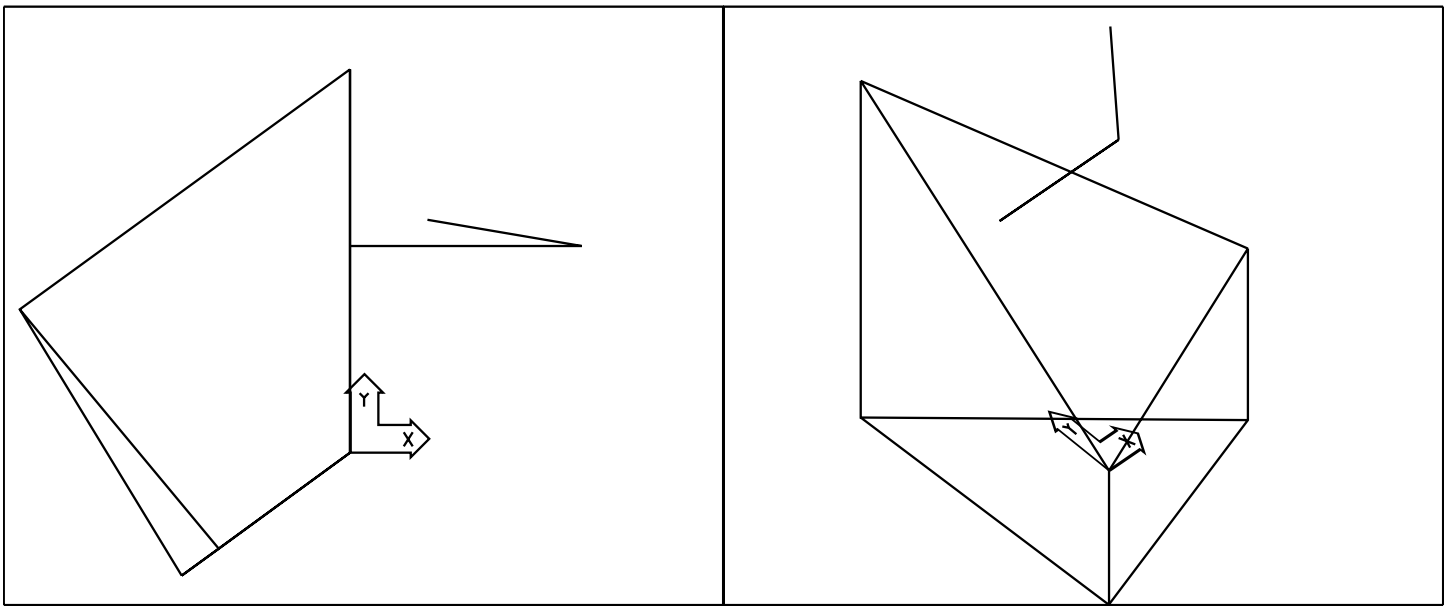

Figure 5

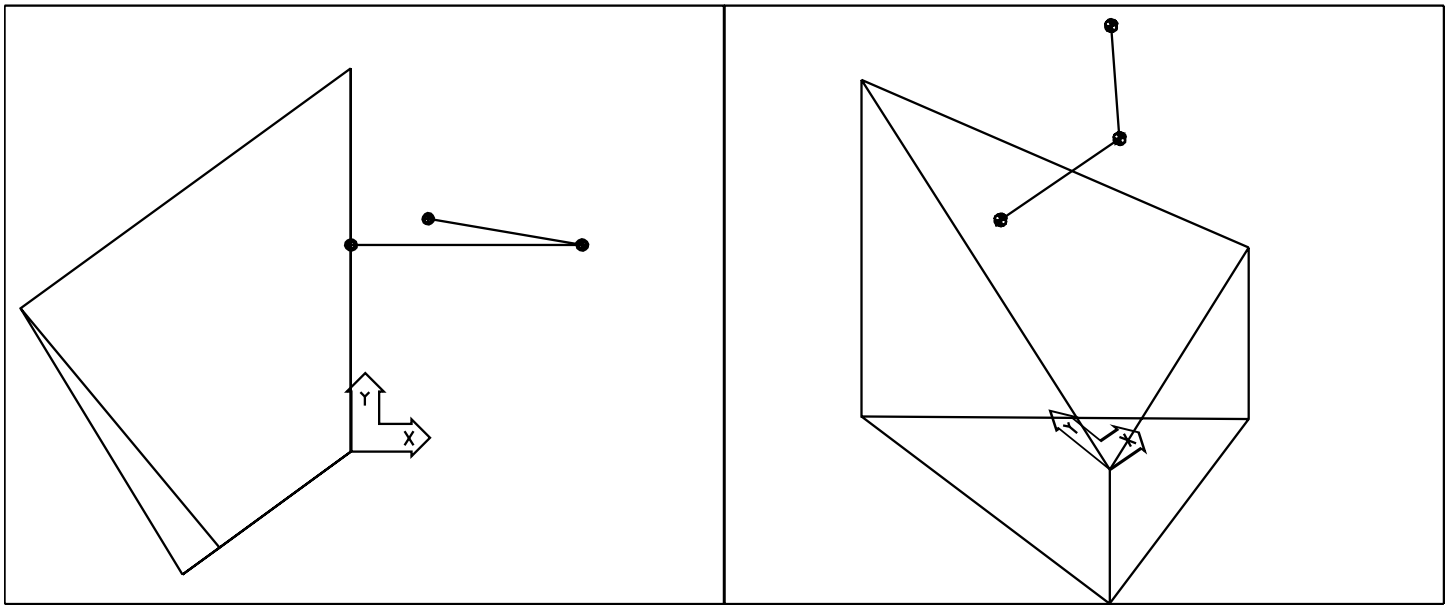

Figure 6

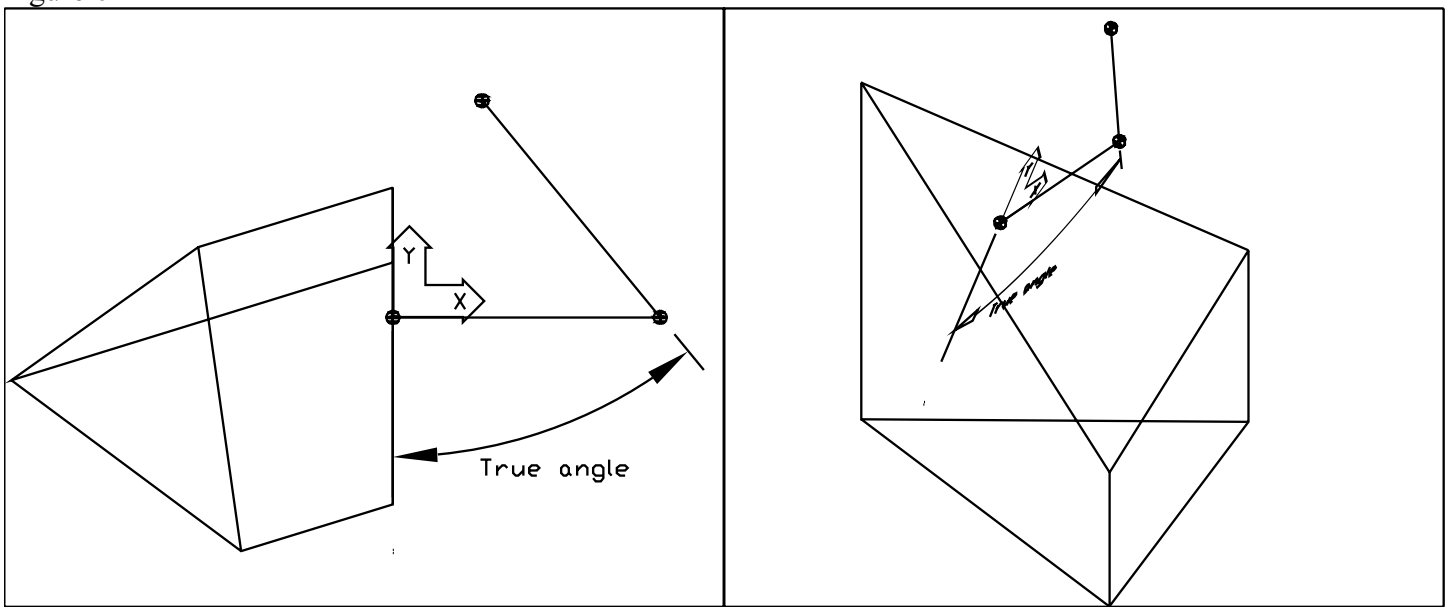

Figure 7

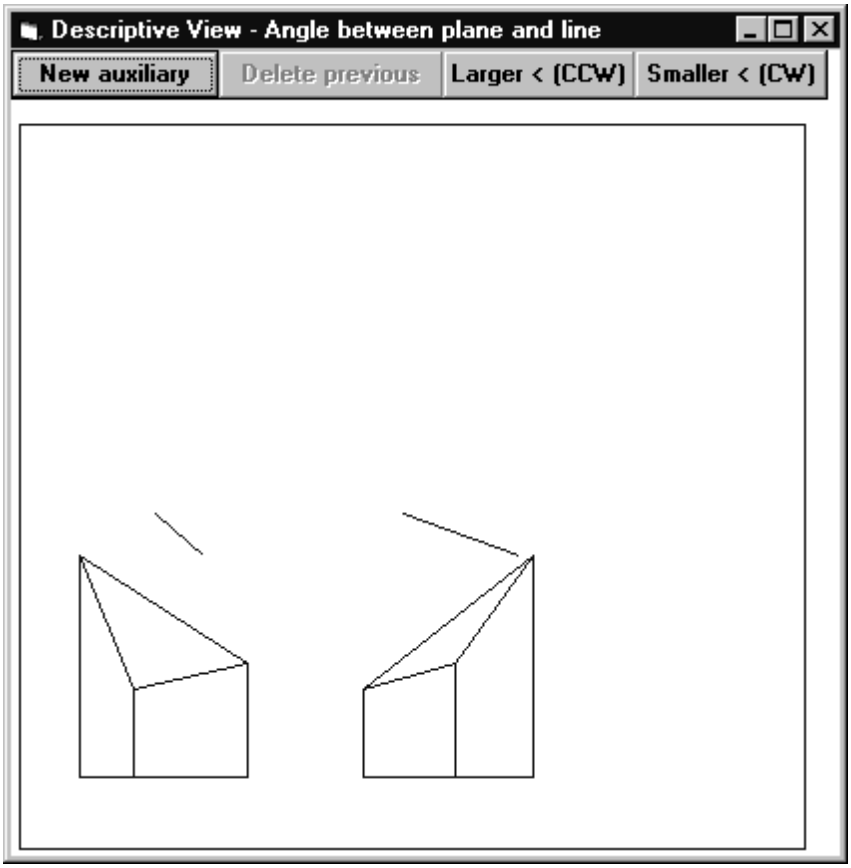

Figure 8

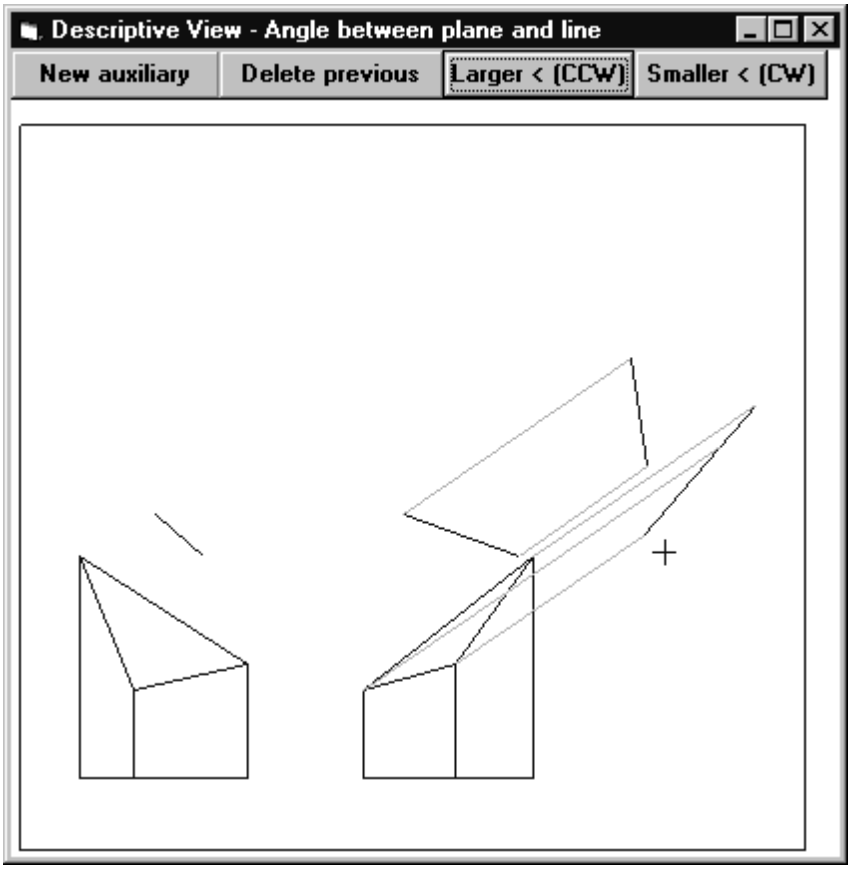

Figure 9

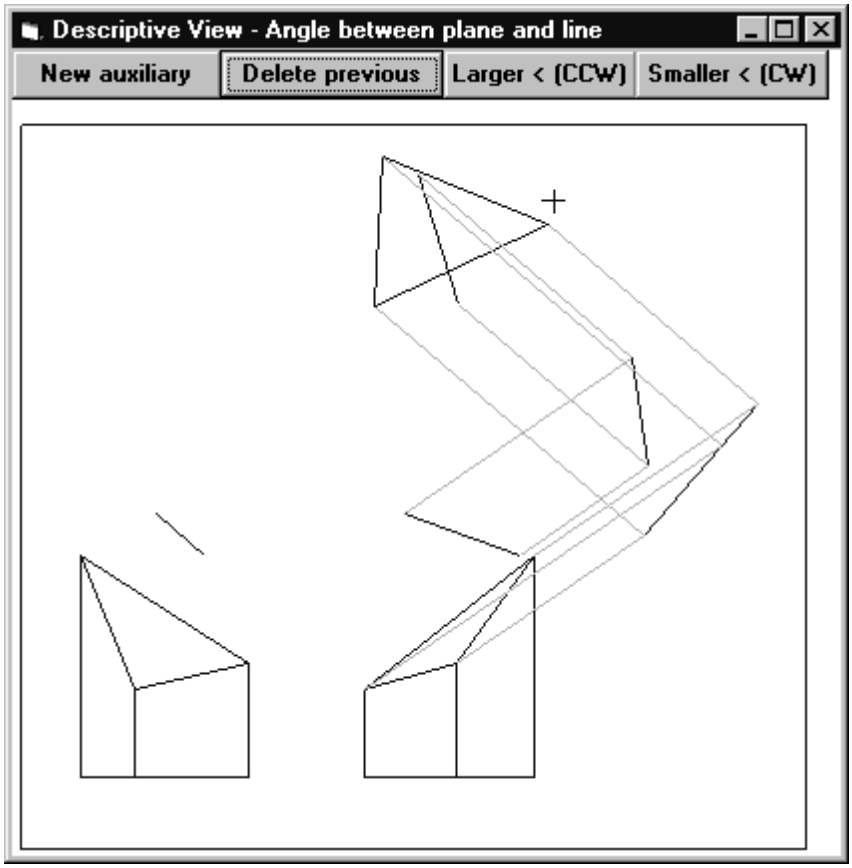

Figure 10